COMPACT DISC PLAYER

# DP-MA5/MA9

## SERVICE MANUAL

KENWOOD

© 1992-9 PRINTED IN JAPAN
B51-4588-00 (O) 4344

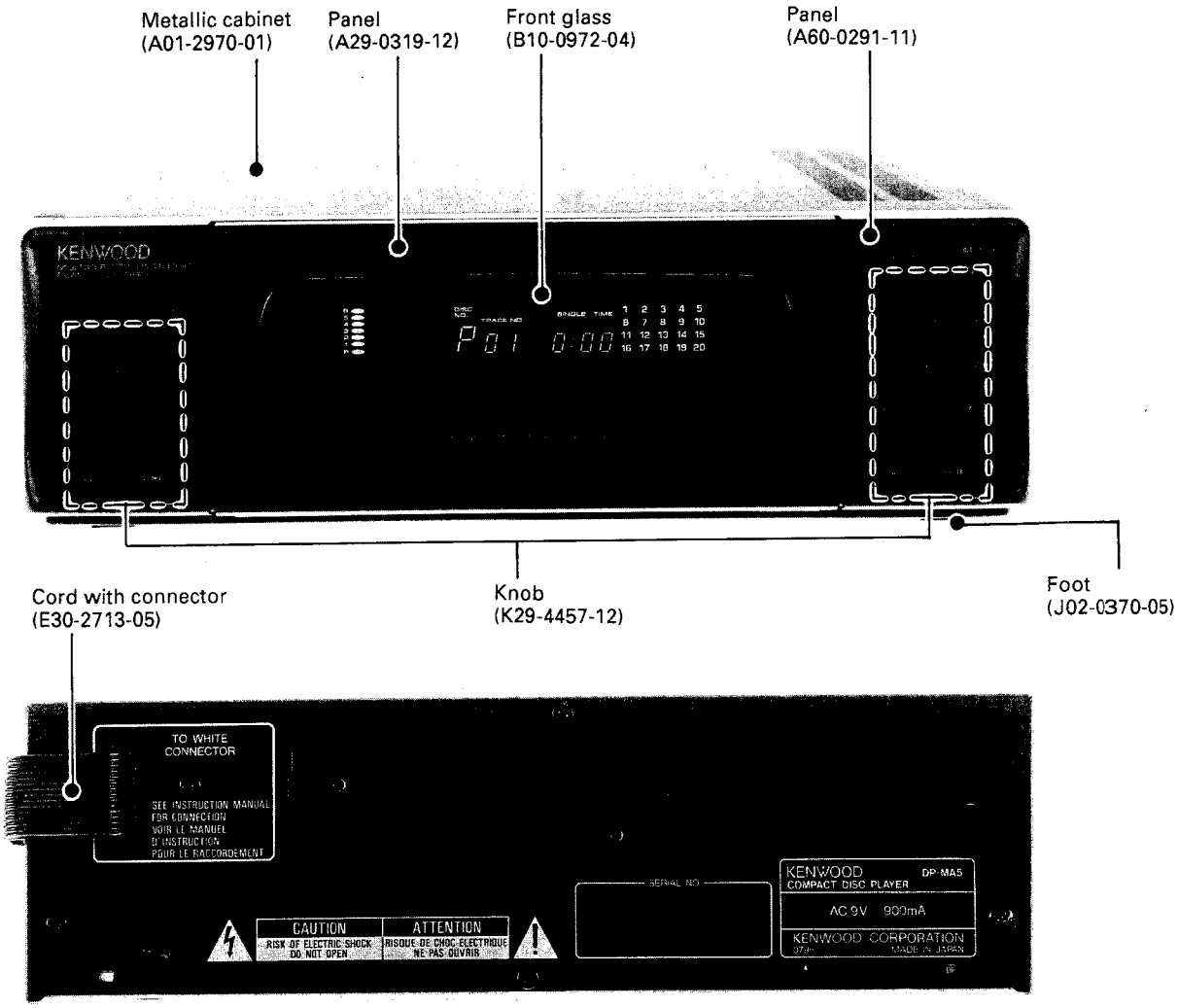


***Photo is DP-MA5.**

In compliance with Federal Regulations, following are reproductions of labels on, or inside the product relating to laser product safety.

KENWOOD-Corp. certifies this equipment conforms to DHHS Regulations No. 21 CFR 1040. 10, Chapter 1, Subchapter J.

**DANGER : Laser radiation when open and interlock defeated. AVOID DIRECT EXPOSURE TO BEAM.**

**CAUTION : When doing repair of DP-MA5, MA9 be sure to have the customer bring the A-A5/L, A-A7/L, C-A9/L or use power supply jig RM-90PS, or supply to 9V AC to terminal Nos 12 and 13 of CN11 on the X32-2280 PC board ass'y. If not get 9V AC, please order the A-848's power transformer (parts No. L07-0038-05 / 120V / 220V / 240V). Refer to the DP-911 service manual. Don't use the "RHEOSTAT".**

# DP-MA5/MA9

## CONTENTS/ACCESSORIES

### CONTENTS


ACCESSORIES ..... 2
EXTERNAL VIEW : DP-MA9 ..... 3
CONTROL ..... 4
REMOTE CONTROL OPERATION ..... 5
DISASSEMBLY FOR REPAIR ..... 7
BLOCK DIAGRAM ..... 9
CIRCUIT DESCRIPTION
1. TEST MODE ..... 10
2. Microprocessor : μPD75217GF-616 (IC6) ..... 12
3. RF Amplifier : CXA1571M (IC1) ..... 14
4. Servo Signal Processor : CXA1372Q (IC2) ... 15
5. Digital Signal Processor : CXD2500AQ (IC3) .... 17
6. D/A Converter : TC9237BF (IC4) ..... 20
ADJUSTMENT ..... 22
REGLAGE ..... 22
ABGLEICH ..... 23
PC BOARD (COMPONENT SIDE VIEW) ..... 25
SCHEMATIC DIAGRAM ..... 27
EXPLODED VIEW (MECHANISM) ..... 31
EXPLODED VIEW (UNIT) ..... 33
PARTS LIST ..... 35
SPECIFICATIONS ..... BACK COVER


### ACCESSORIES

- FM indoor antenna ..... 1
  (T90-0176-05)

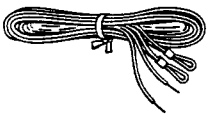

- AM loop antenna ..... 1
  (T90-0173-05)

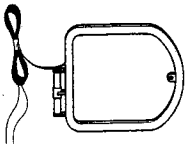

- Loop antenna stand ..... 1
  (J19-2815-04)

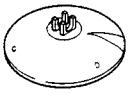

- Speaker cords* ..... 2
  *Refer to speaker's service manual.

- Magazine (with 6 disc trays) ..... 1
  (J19-3394-13)

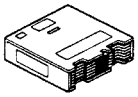

- Battery ("AAA" or "R03") ..... 2
  (–)

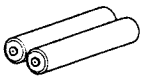

- Remote control unit ..... 1
  (X94-1000-71 : RC-A5) DP-MA5
  (X94-1000-61 : RC-A7) DP-MA9

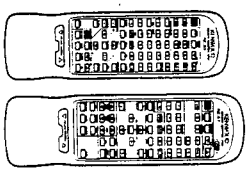

- Antenna adaptor (75Ω/300Ω) ..... 1
  (T90-0185-05) : For U.K. and Europe

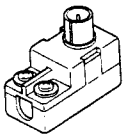

- AC plug adapter (M type only) ..... 1
  (E03-0115-05 : Except for some areas)

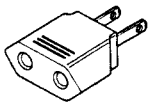

For the unit with a European AC plug in areas other than Europe.

Speaker cords are packed with the speakers. Remote control unit is packed with the graphic equalizer unit. Magazine is packed with the CD player. All other accessories are packed with the receiver unit.

| System name | Pre-amp | Main amp | Receiver | Graphic equalizer | CD player | Cassette deck | Speaker |
|---|---|---|---|---|---|---|---|
| UD-900M | C-A9/L | B-A9 | – | – | DP-MA9 | X-A9 | LS-A9 |
| UD-700M | – | – | A-A7/L | GE-A7 | DP-MA9 | X-A9 | LS-A6 |
| UD-500M | – | – | A-A5/L | GE-A5 | DP-MA5 | X-A5 | LS-A5 |

| System name | Outer packing case |
|---|---|
| UD-900M | H60-0108-04 : M, P, X |
| | H60-0109-04 : E |
| | H60-0110-04 : K |
| UD-500M | H60-0104-04 : P, M, X, Y |
| | H60-0105-04 : E |

| System name | Outer packing case |
|---|---|
| UD-500M | H60-0106-04 : K |
| UD-700M | H60-0101-04 : M, X, P |
| | H60-0102-04 : E |
| | H60-0100-04 : K |
| | |

# EXTERNAL VIEW : DP-MA9

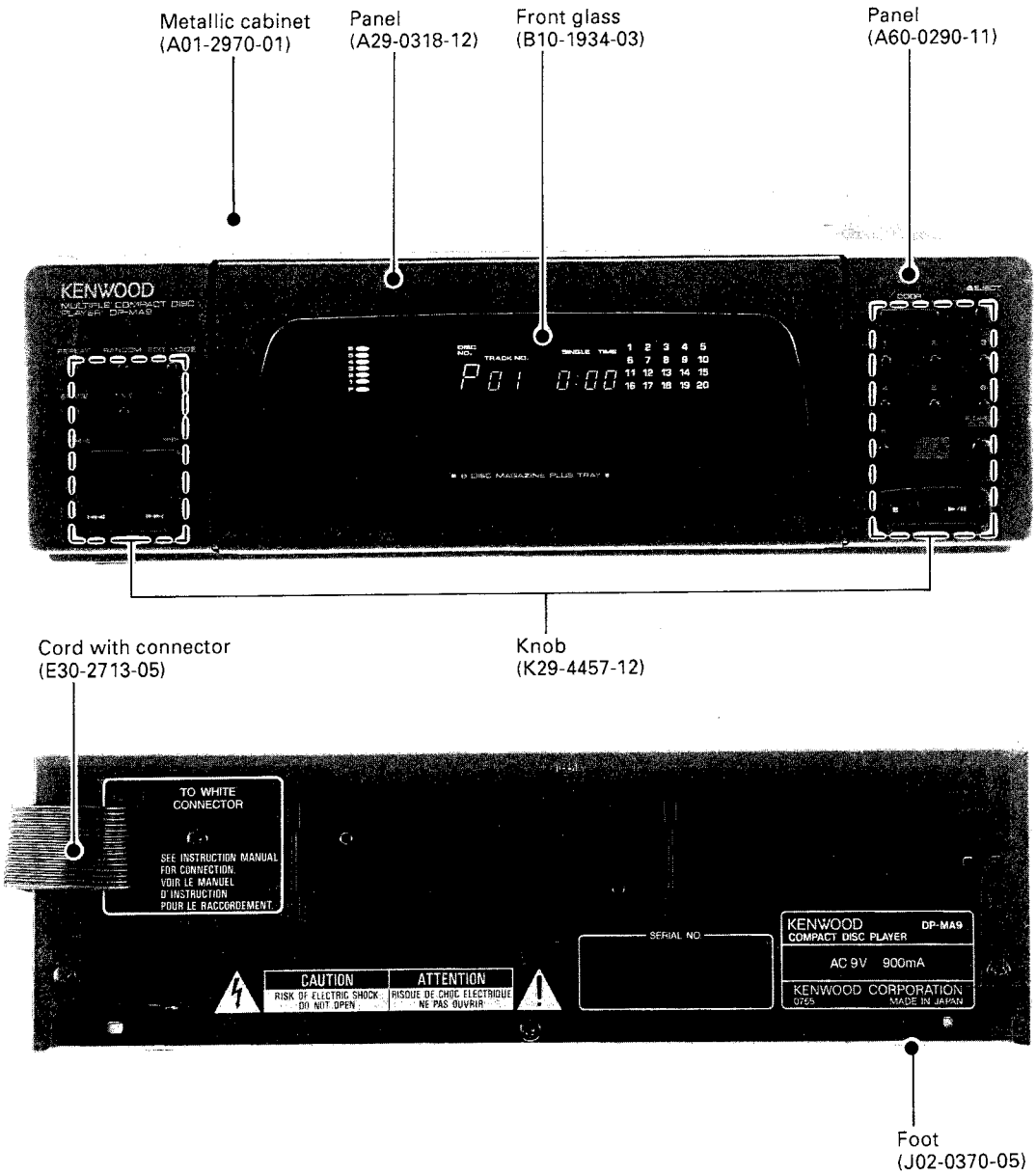


***Photo is DP-MA9.**

# DP-MA5/MA9

## CONTROL

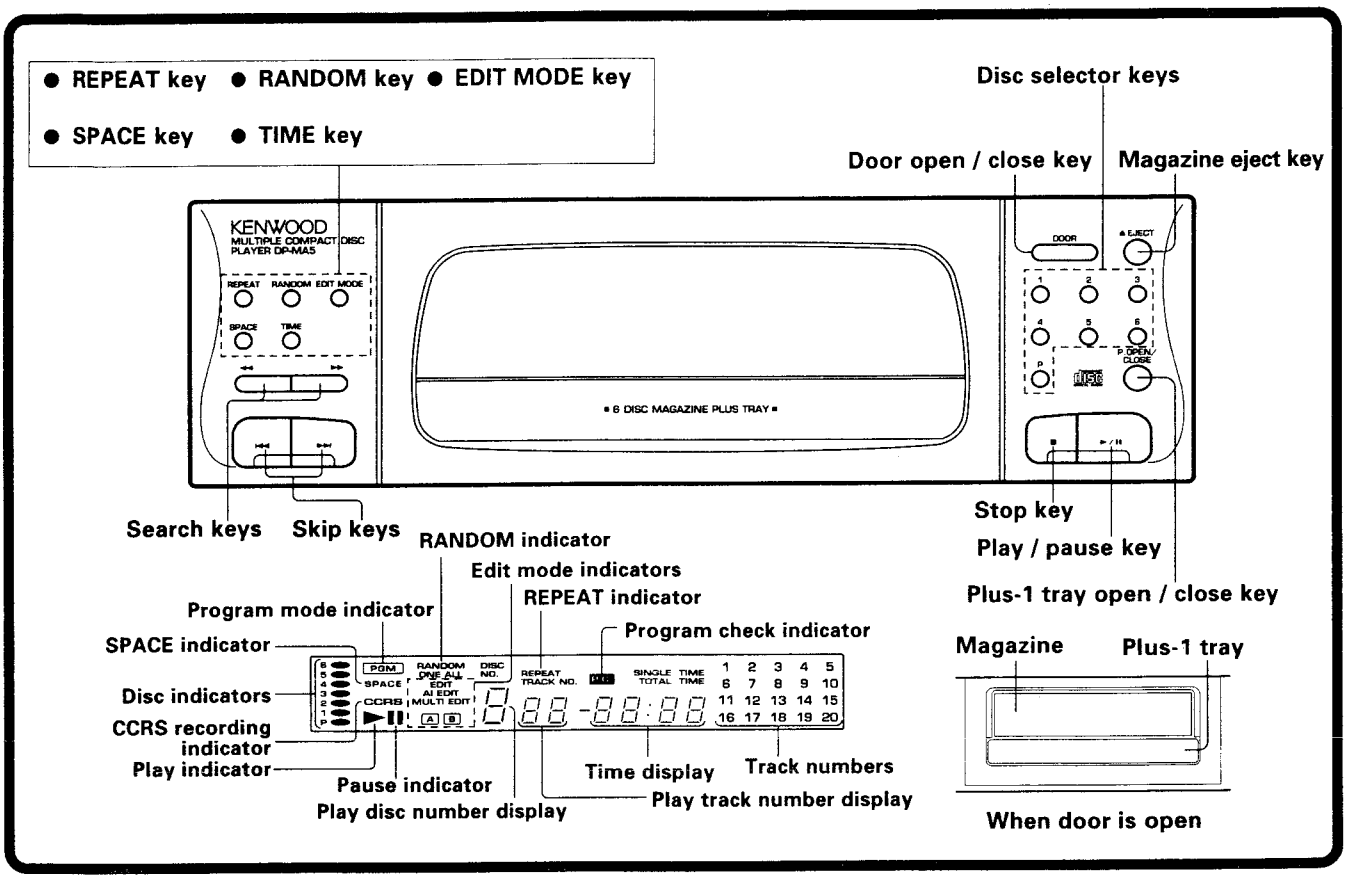


### • Note related to transportation and movement (CD player)

Before transporting or moving this unit, carry out the following operations.

1. **Turn the power ON but do not load a disc.**
2. **Wait a few seconds and verify that the display shown appears.**
3. **Turn the power OFF.**
4. **Set the transportation hardware to the rear panel (exploded view No. 640).**

Without magazine, press the [►/II] key.

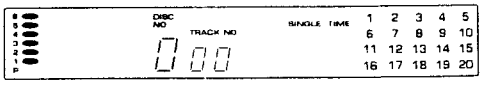

# REMOTE CONTROL OPERATION

## Model : RC-A5 (DP-MA5)

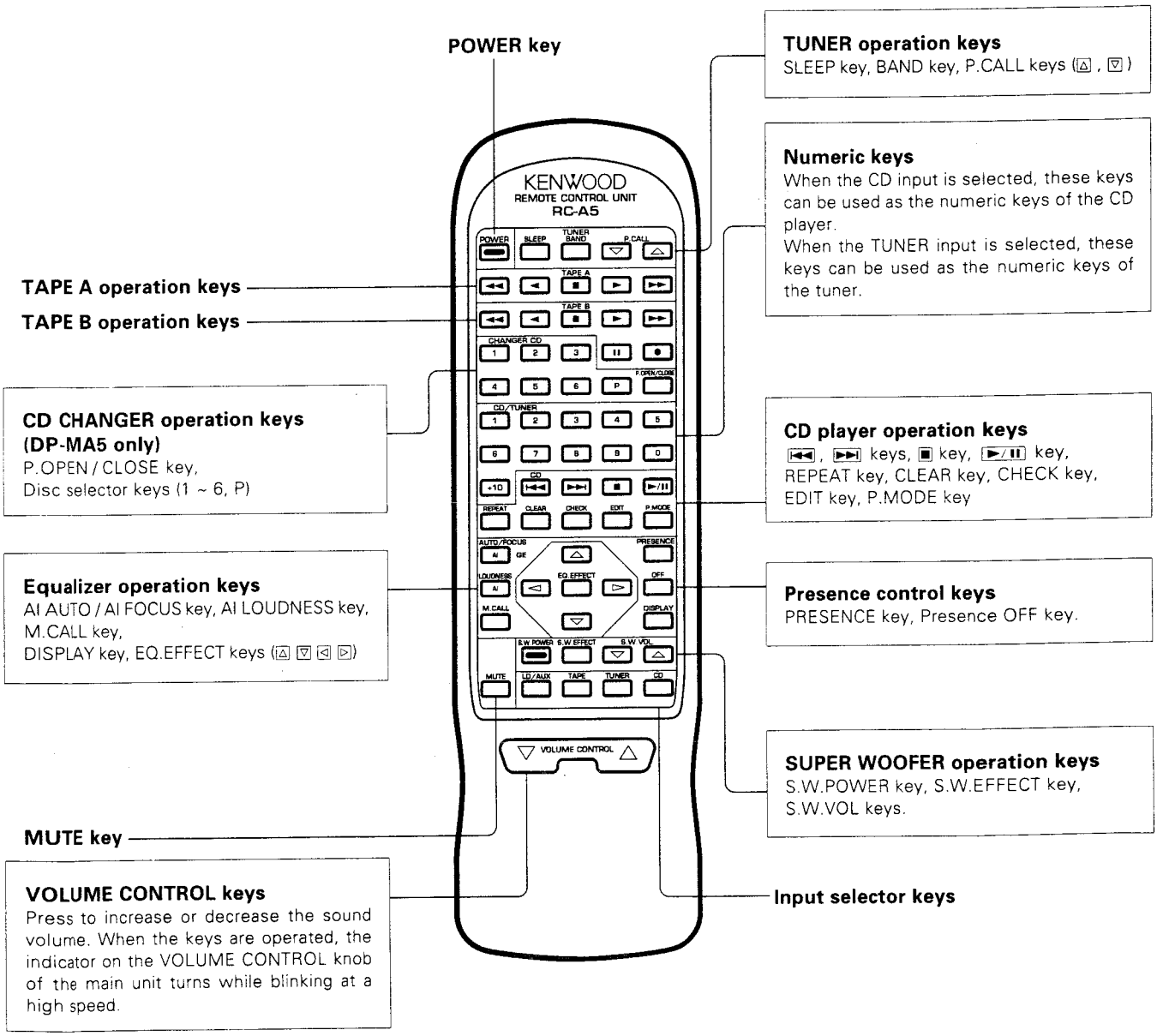

# DP-MA5/MA9

## REMOTE CONTROL OPERATION

### Model : RC-A7 (DP-MA9)

**Remote control function A / B selector switch**
The keys in the sections marked with ▒ can be used in two ways according to the position of this switch.
- When the function of a key is described in white and brown characters, the brown function is usable in the A position and the white function is usable in the B position.
- Other keys are usable regardless of the A or B position of this switch.

**SUPER WOOFER operation keys**
To operate the super woofer speaker, set the A / B switch to the A position.
S.W.POWER key, S.W.EFFECT key, S.W.VOL keys.

**TUNER operation keys**
To operate the tuner, set the A / B switch to the B position.
SLEEP key, BAND key, P.CALL key.

**POWER key**

**Cassette deck operation keys**
To operate deck A, set the A / B switch to the A position. (The ■ and ❚❚ keys are invalid in this position.)
To operate deck B, set the A / B switch to the B position.

**CD player operation keys**
⏮ ⏭ keys, ■ key, ►/❚❚ key, CLEAR key, CHECK key, EDIT key, P.MODE key.
When A / B switch is in the A position:
P.OPEN / CLOSE key (for CD player equipped with CD disc changer).
When A / B switch is in the B position:
REPEAT key

**Numeric keys**
When the CD input is selected, these keys can be used as the numeric keys of the CD player.
When the TUNER input is selected, these keys can be used as the numeric keys of the tuner.

**CD changer (DP-MA9) operation keys**
To operate the changer-equipped CD player, set the A / B switch to the A position.

**Presence control keys**
ASFC keys, REAR LEVEL keys, DELAY TIME keys.

**Equalizer operation keys**
To operate the equalizer, set the A / B switch to the B position.
AI AUTO / AI FOCUS key, AI LOUDNESS key, M.CALL (Memory Call) key, DISPLAY key, EQ.EFFECT keys (▽, △, ▷, ◁)

**Input select keys**

**Presence effect keys**
S.4ch key, F.4ch key,
DOLBY SURROUND key, Presence OFF key.

**VOLUME CONTROL keys**
Press to increase or decrease the sound volume. When the keys are operated, the indicator on the VOLUME CONTROL knob of the main unit turns while blinking at a high speed.

**MUTE key**

# DISASSEMBLY FOR REPAIR

## 1. How to Disassemble MD (Mechanism Deck) ass'y

*** Take out Magazine pack.**

1. Remove solenoid ass'y (❶).
2. Remove magazine lock ass'y (❷).

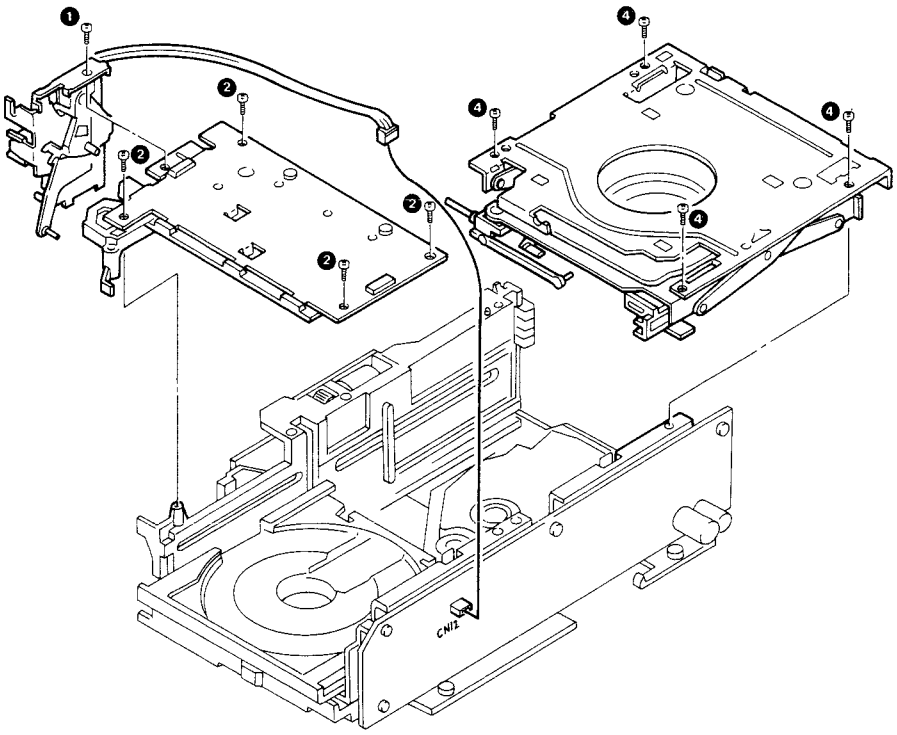


3. Remove screws of vertical motor (❸).
4. Lift up motor and move slider fully backwards.
5. Remount vertical motor with screws.
6. Remove lifter ass'y (❹).
7. Remove screws of MD ass'y (❺).

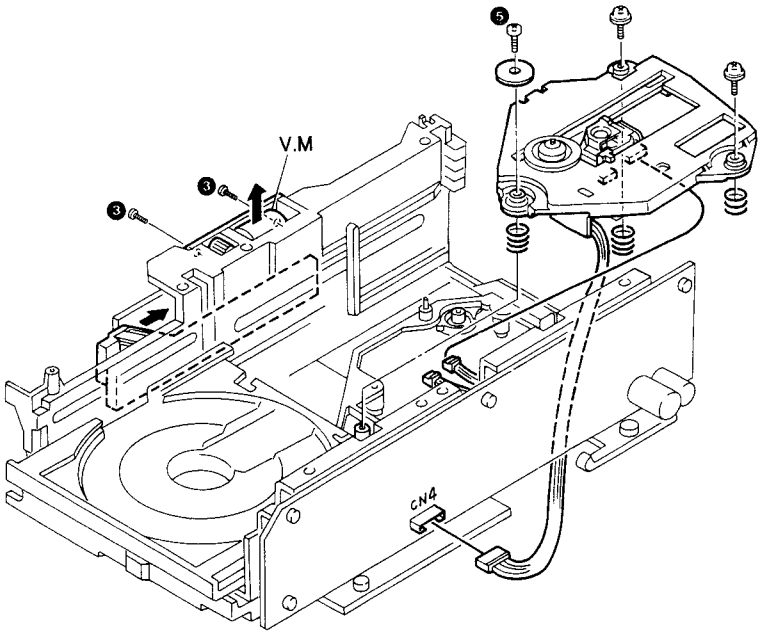

# DISASSEMBLY FOR REPAIR

## 2. How to Replace the Pickup

1. Remove MD ass'y and connector for pickup (❶).
2. Remove washer and screw (❷). And remove feed gear.
3. Remove screw for pickup rod (❸-1).
4. Pull out rod (❸-2) and remove pickup (❸-3).

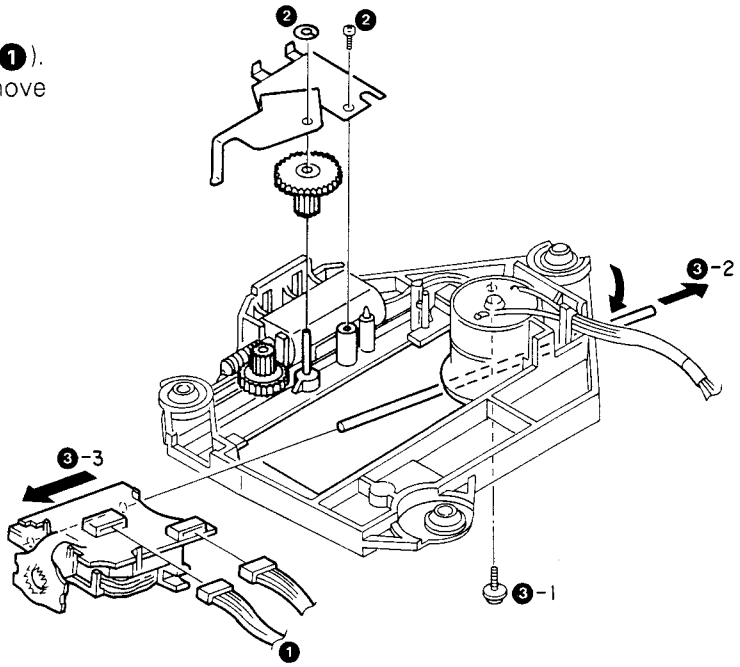


## 3. How to Remove Plus 1 Tray ass'y

1. Unscrew screws (❶) and remove magazine pack holder.
2. Move lock lever (❷) frontwards and pull out plus 1 tray frontwards. If not come out tray, turn gear clockwise.
3. Remove screws (❸).

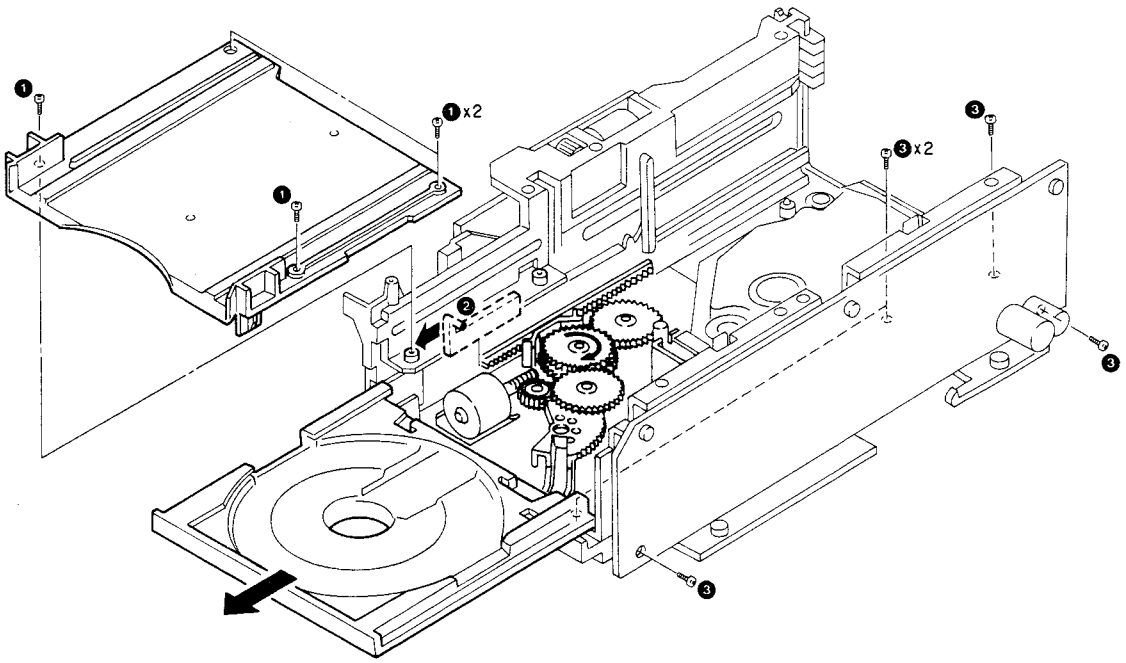

# BLOCK DIAGRAM

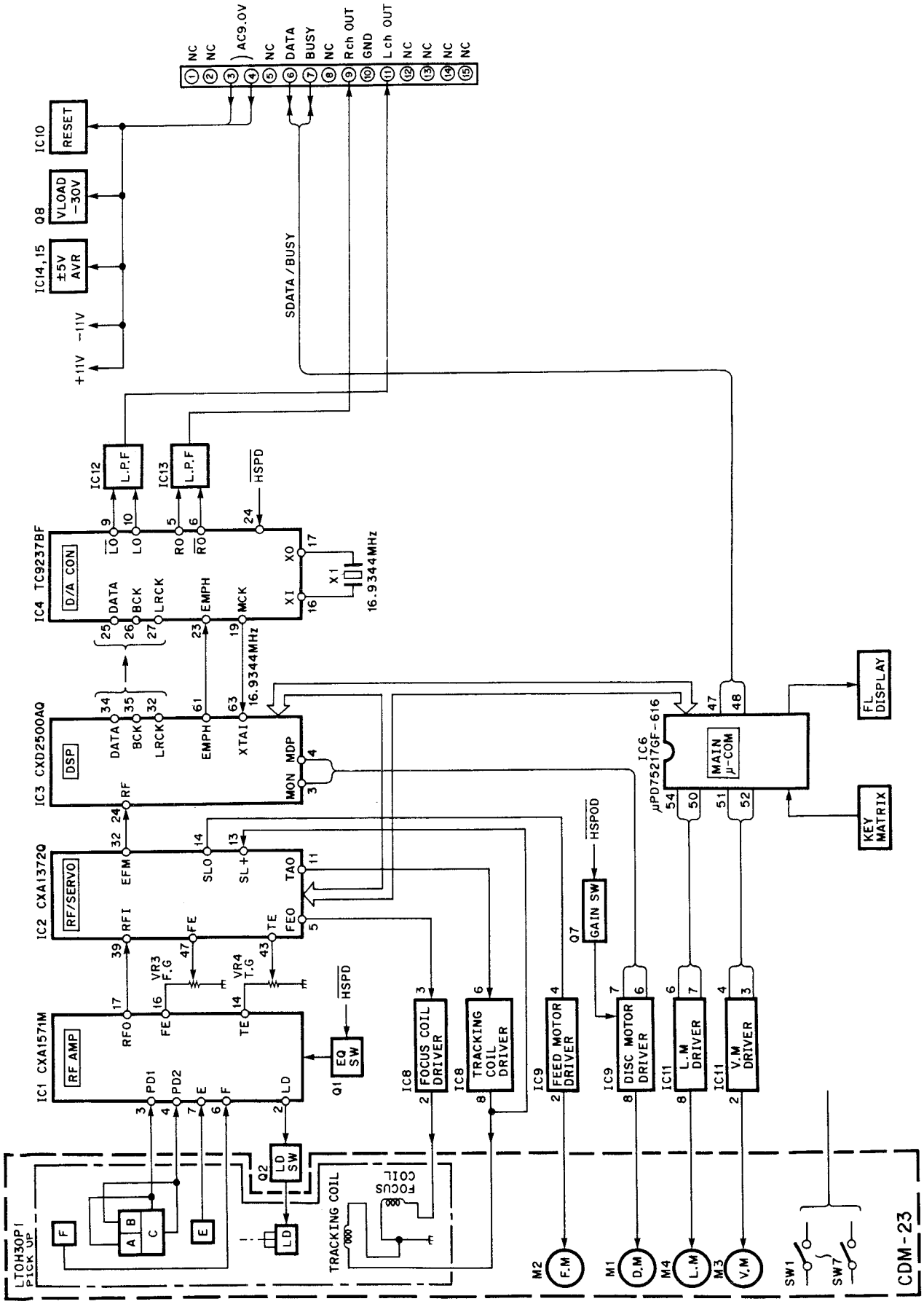

# DP-MA5/MA9

## CIRCUIT DESCRIPTION

### 1. Test Mode

#### 1-1. Setting the test mode

This microprocessor built in this unit (X32-) can be put to TEST MODE by just short-circuiting the test pins (#2 and #3).

| No. | Input key | Function | Display |
|---|---|---|---|
| 1 | STOP | (1) Focusing servo ..... OFF<br>(2) Tracking servo ..... OFF<br>(3) Feed servo ..... OFF | DISC NO. TRACK NO. 01 |
| 2 | REPEAT | (1) Laser (In STOP mode only) ..... ON | REPEAT TRACK NO. 02 |
| 3 | RANDOM | (1) Focusing servo ..... ON<br>(2) Tracking servo ..... OFF<br>(3) Feed servo ..... OFF | DISC NO. TRACK NO. P.C. P03 |
| 4 | TIME | (1) Focusing servo ..... ON<br>(2) Tracking servo ..... ON<br>(3) Feed servo ..... OFF | DISC NO. TRACK NO. P04 |
| 5 | PLAY | (1) Focusing servo ..... ON<br>(2) Tracking servo ..... ON<br>(3) Feed servo ..... ON | SPACE DISC NO. TRACK NO. P05 |
| 6 | DISC 1 | Load No.1 disc to No.6 in order. | DISC NO. TRACK NO. A 101 1 2 3 4 5 6 7 8 9 10 11 12 13 14 15 16 17 18 19 20 |
| 7 | DISC 2 | Read the TOC (table of contents) of disc No.3 to No.6 in order.<br>TEST mode is cancelled after reading the TOC of No.6 disc, and then playback the 1st track. | DISC NO. TRACK NO. B 301 1 2 3 4 5 6 7 8 9 10 11 12 13 14 15 16 17 18 19 20 |

# CIRCUIT DESCRIPTION

| No. | Input key | Function | Display |
|---|---|---|---|
| 8 | DISC P | Load the decided No. disc which is pressed by the key and set to STOP mode. ex. Disc No.4 key is pressed (PLAY, CHECK and CLEAR keys are available to operat). | DISC NO. TRACK NO. P 01 |
| 9 | UP | Turns all FL display lamps ON. | PGM SPACE CCRS RANDOM ONE ALL EDIT AI EDIT MULTI EDIT A B DISC NO. REPEAT TRACK NO. P.C. SINGLE TOTAL TIME TIME 1 2 3 4 5 6 7 8 9 10 11 12 13 14 15 16 17 18 19 20 |
| 10 | DOWN | Turns all FL display lamps OFF. "DISC" and "1 ~ 6" are not off because circuit is static operation. | TRACK NO. |
| 11 | EDIT | (1) Door opens. (2) P1 tray come out. Press "EDIT" key, "PLAY MODE". | SPACE DISC NO. TRACK NO. P 05 |
| 12 | FF | In the STOP mode, moves the pickup slightly toward the outer position of disc. | |
| 13 | FB | In the STOP mode, moves the pickup slightly toward the inner position of disc. | |
| 14 | SPACE | High-speed playback CHECK mode (in stop mode only) playback P1 disc in high-speed mode. If press "SPACE" key, change to normal mode. In this mode, all keys are available. | EDIT DISC NO. TRACK NO. P 01 |

# CIRCUIT DESCRIPTION

## 2. Microprocessor : μPD75217GF-616 (IC6)

### 2-1. Pin connection diagram

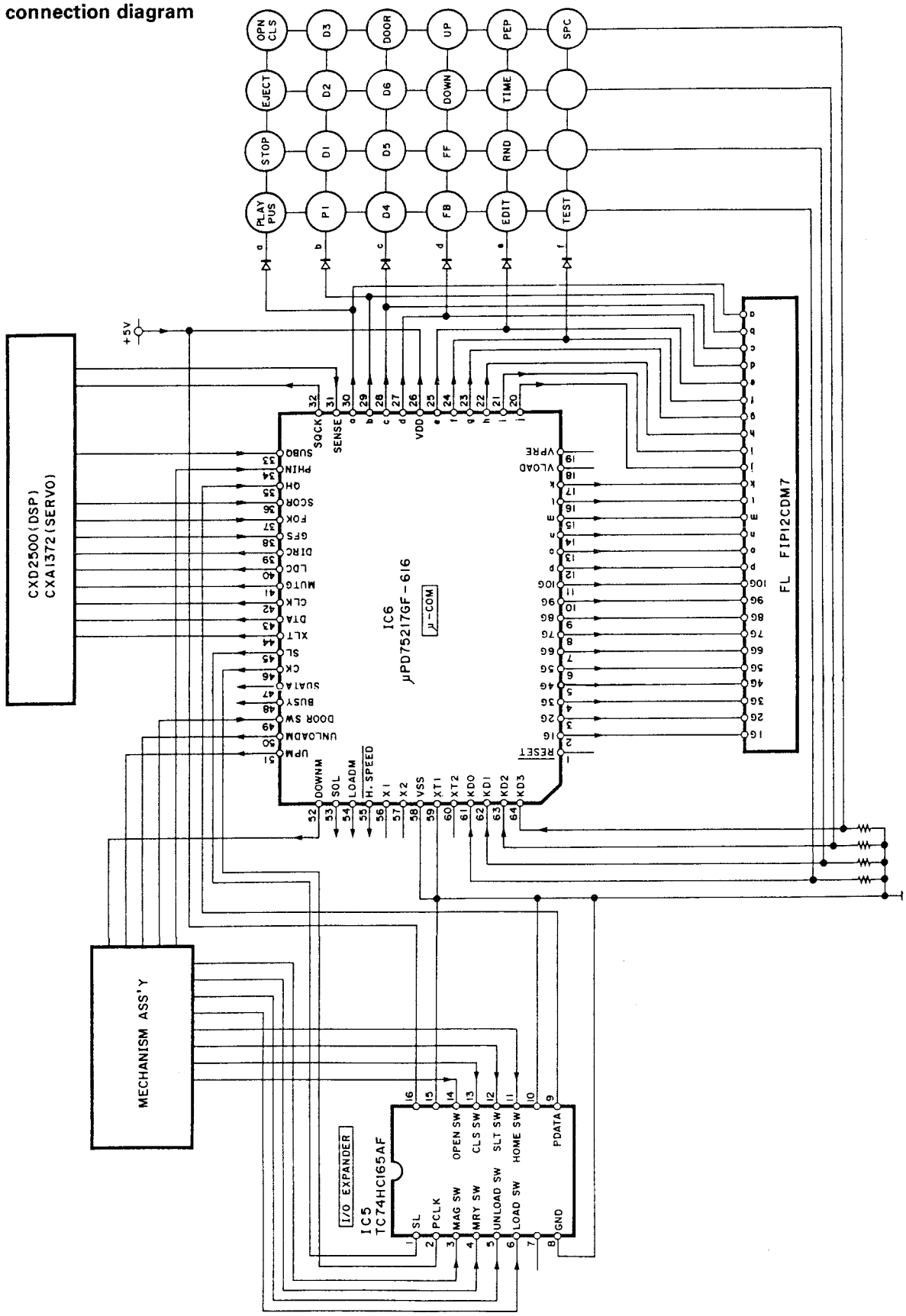

# CIRCUIT DESCRIPTION

## 2-3. Pin functions : μPD75217GF-616

| Pin No. | Pin name | I/O | Function |
|---|---|---|---|
| 1 | $\overline{\text{RESET}}$ | – | Reset input port |
| 2~11 | 1G~10G | O | FL segment control port |
| 12~17 | p~k | O | FL segment control port (key-scan) |
| 18 | VLOAD | O | FL driver negative power supply |
| 19 | VPRE | O | FL pre-driver power supply |
| 20~25 | j~e | O | FL segment control port also used for key-scan |
| 26 | VDD | – | Power supply (+5V) |
| 27~30 | d~a | O | FL segment control port also used for key-scan |
| 31 | SENSE | I | Signal detection port for SENSE signal from signal processor and servo IC |
| 32 | SQCK | O | Q-data read clock output port |
| 33 | SUBQ | I | Q-data input port |
| 34 | PHIN | I | Photo interrupter input port for mechanism |
| 35 | QH | I | Data input from TC74H165 |
| 36 | SCOR | I | Sub-code frame sync detection signal input port |
| 37 | FOK | I | Input port of FOK signal from RF amp |
| 38 | GFS | I | Input port of frame sync signal |
| 39 | DIRC | O | DIRC control port of servo IC |
| 40 | LDC | O | Laser ON/OFF signal output |
| 41 | MUTG | O | Mute port of signal processor |
| 42 | CLK | O | Signal processor and servo IC control out port (CLOCK) |
| 43 | DATA | O | Signal processor and servo IC control out port (DATA) |
| 44 | XLT | O | Signal processor and servo IC control out port (LATCH) |
| 45 | S/L | O | Latch output port of TC74HC165 |
| 46 | CK | O | Clock output port of TC74HC165 |
| 47 | SDATA | I/O | Serial DATA I/O port |
| 48 | BUSY | I/O | Serial BUSY I/O port |
| 49 | DOORSW | I | Door switch input port of mechanism |
| 50 | UNLOADM | O | Control port of unloading motor for mechanism |
| 51 | UPM | O | Control port of UP motor for mechanism |
| 52 | DOWNM | O | Control port of DOWN motor for mechanism |
| 53 | SOL | O | Control port of solenoid for mechanism |
| 54 | LOADM | O | Control port of loading motor for mechanism |
| 55 | H.SPEED | O | High-speed control port (Active L) |
| 56 | X1 | – | Oscillation input port (4.19MHz) |
| 57 | X2 | – | Not used |
| 58 | Vss | – | GND |
| 59 | XT1 | – | GND |
| 60 | XT2 | – | GND |
| 61~64 | KD0~3 | I | Key input port |

## 2-3. I/O Expander : TC74HC165AF (IC5)
### Pin functions

| Pin No. | Pin name | I/O | Function |
|---|---|---|---|
| 1 | SL | I | Shift load input |
| 2 | PCLK | I | Clock input |
| 3 | MAGSW | I | Magazine switch (S4) |
| 4 | MRYSW | I | Memory switch (S3) |
| 5 | UNLOADSW | I | Unload switch (S2) |
| 6 | LOADSW | I | Load switch |
| 7 | – | O | No use |
| 8 | GND | – | Ground |
| 9 | PDATA | O | Data output |
| 10 | – | I | No use |
| 11 | HOMESW | I | Home position switch (S1) |
| 12 | SLTSW | I | Start limit switch (S8) |
| 13 | CLSSW | I | Tray close switch (S6) |
| 14 | OPNSW | I | Tray open switch (S7) |
| 15 | – | I | No use |
| 16 | Vcc | – | Power supply (+5V) |

# CIRCUIT DESCRIPTION

## 3. RF amplifier : CXA1571M (IC1)

CXA1571M is an IC developed for compact disc players. It contains an RF amplifier for 3 spot optical pickup, focus error amplifier, tracking error amplifier, and APC circuit.

### 3-1. Block diagram

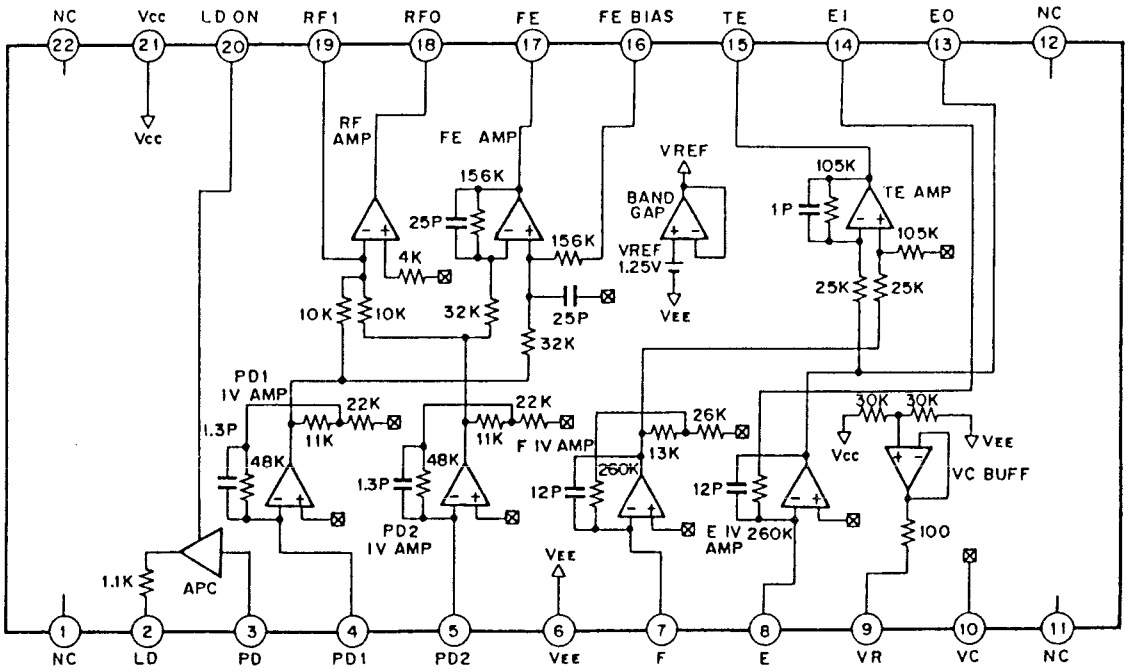


### 3-2. Pin functions

| Pin No. | Pin name | I/O | Function |
|---|---|---|---|
| 2 | LD | O | APC LD amplifier output pin. |
| 3 | PD | I | APC LD amplifier input pin. |
| 4 | PD1 | I | RF I-V amplifier inverted input pin. Current input by connecting to the photo diode A+C terminals. |
| 5 | PD1 | I | RF I-V amplifier inverted input pin. Current input by connecting to the photo diode B+D terminals. |
| 7 | F | I | F I-V amplifier inverted input pin. Current input by connecting to the photo diode F terminal. |
| 8 | E | I | E I-V amplifier inverted input pin. Current input by connecting to the photo diode E terminal. |
| 9 | VR | O | CD voltage output pin of (Vcc+VEE) / 2. |
| 10 | VC | I | Connected GND when using dual power supply (±). |
| | | | Connected to VR (pin 9) when using a single power supply. |
| 13 | EO | O | E output of I-V amplifier. |
| 14 | EI | – | E I-V amplifier feedback input pin. For E I-V amplifier gain adjustment. |
| 15 | TE | O | Tracking error amplifier output pin. |
| 16 | FE-BIAS | I | Bias pin on the focus error amplifier non-inverted side. |
| 17 | FE | O | Focus error amplifier output pin. |
| 18 | RFO | O | RF summing amplifier output pin. |
| 19 | RFI | I | Inverted input pin of RF amplifier. Gain of amplifier is fixed by resistor between RFO and RFI. |
| 20 | LD-ON | I | LD ON / OFF select pin. (Vcc : ON) |

# CIRCUIT DESCRIPTION

## 4. Servo Signal Processor : CXA1372Q (IC2)

### Outline

CXA1372Q is a bipolar IC developed to be used for processing of the RF signal (Focus OK, mirror, defect, comparator of EFM) and servo control.

### Functions

- Auto asymmetry control
- Focus OK detection circuit
- Mirror detection circuit
- Defect detection and countermeasure circuit
- EFM comparator
- Focus servo control
- Tracking servo control
- Thread servo control

### 4-1. Pin connection

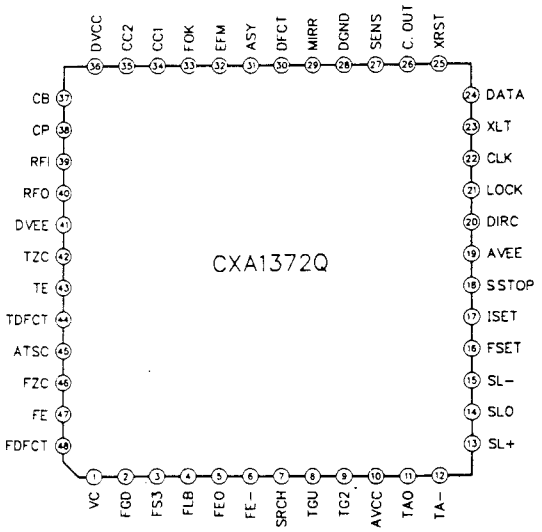


### 4-2. Block diagram

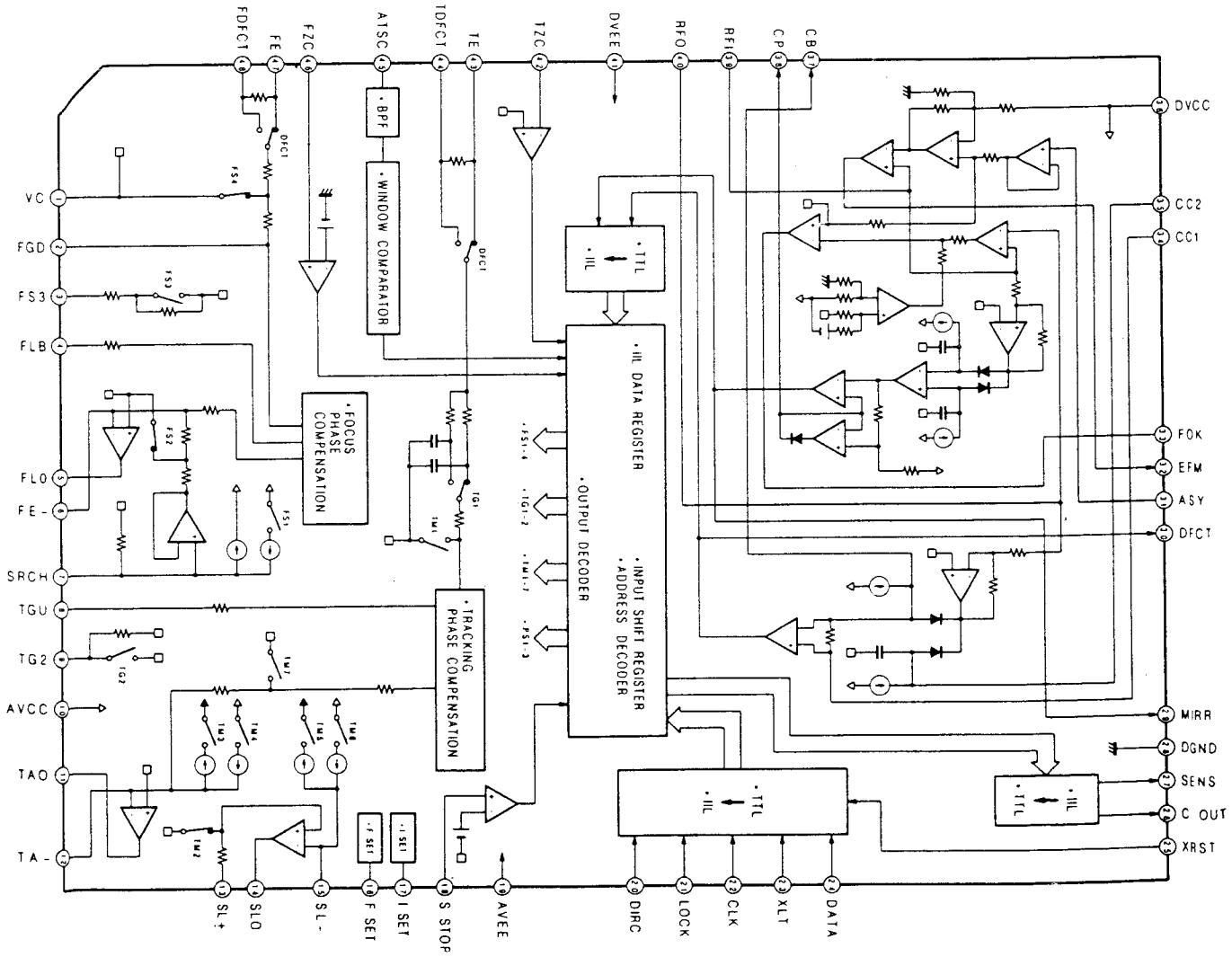

# CIRCUIT DESCRIPTION

### 4-3. Pin functions

| Pin No. | Pin name | I/O | Function |
|---|---|---|---|
| 1 | VC | I | Middle-point voltage input terminal.<br>When two power sources are used : GND, when single power source is used : (Vcc+GND)/2. |
| 2 | FGD | I | When lowering the high-band gain of the focus servo, insert a capacitor between this terminal and terminal No. 3. |
| 3 | FS3 | I | Change the high-band gain of the focus servo by turning FS3 on and off. |
| 4 | FLB | I | Outside terminal of time constant for raising the low-band of the focus servo. |
| 5 | FEO | O | Focus drive output. |
| 6 | FE– | I | Inverted input terminal of focus amplifier. |
| 7 | SRCH | I | Outside terminal of time constant for making focus search waveform. |
| 8 | TGU | I | Outside terminal of time constant for changing high-band gain of tracking. |
| 9 | TG2 | I | Outside terminal of time constant for changing high-band gain of tracking. |
| 10 | AVCC | | |
| 11 | TAO | O | Tracking drive output. |
| 12 | TA– | I | Inverted input terminal of tracking amplifier. |
| 13 | SL+ | I | Non-inverted input terminal of thread amplifier. |
| 14 | SLO | O | Thread drive output. |
| 15 | SL– | I | Inverted input terminal of thread amplifier. |
| 16 | FSET | I | Terminal for setting the peak for phase compensation of focus tracking. |
| 17 | ISET | I | Current for determining the height of the focus search track jump thread kick is applied. |
| 18 | SSTOP | I | Terminal for ON/OFF detecting signal of limit switch for detecting the most inside line of disc. |
| 19 | AVEE | | |
| 20 | DIRC | I | Used to jump over one track. 47kΩ pull-up resistor is inserted. |
| 21 | LOCK | I | When "L", thread runaway-preventive circuit operates. 47kΩ pull-up resistor is inserted. |
| 22 | CLK | I | Clock input for transferring the serial data from CPU (having no pull-up resistors). |
| 23 | XLT | I | Latch input from CPU (having no pull-up resistors). |
| 24 | DATA | I | Serial data input from CPU (having no pull-up resistors). |
| 25 | XRST | I | Reset when reset input terminal is at "L" (having no pull-up reisitors). |
| 26 | SENS | O | Outputs FZC, AS, TZC, SSTOP, etc. on receipt of command from CPU. |
| 27 | C. OUT | O | Signal output for counting tracks. |
| 28 | DGND | | |
| 29 | MIRR | O | Output terminal of MIRR comparator. (DC voltage : Load of 10kΩ connected) |
| 30 | DFCT | O | Output terminal of DEFECT comperator. (DC voltage : Load 10kΩ connected) |
| 31 | ASY | I | Input terminal of auto asymmetry control. |
| 32 | EFM | O | Output terminal of EFM comparator. (DC voltage : Load of 10kΩ connected) |
| 33 | FOK | O | Output terminal of focus OK comparator. (DC voltage : Load of 10kΩ connected) |
| 34 | CC1 | I | DEFECT bottom hold output terminal. |
| 35 | CC2 | O | Terminal in which DEFECT bottom hold output is input after capacitive coupling. |
| 36 | DVCC | | |
| 37 | CB | I | Terminal to which DEFECT bottom hold capacitor is connected. |
| 38 | CP | I | Terminal for connecting MIRR hold comparator. Non-inverted input terminal of MIRR comparator. |
| 39 | RFI | I | Terminal in which output of RF summing amplifier is input after capacitive coupling. |
| 40 | RFO | O | Output terminal of RF summing amplifier. Check point of eye pattern. |
| 41 | DVEE | | |
| 42 | TZC | I | Input terminal of tracking zero cross comparator. |
| 43 | TE | I | Input terminal of tracking error. |
| 44 | TDFCT | I | Terminal for connecting the capacitor for time constant in case of defect. |
| 45 | ATSC | I | Input terminal of window comparator for detecting ATSC. |
| 46 | FZC | I | Terminal for inputting the focus zero cross comparator. |
| 47 | FE | I | Input terminal of focus error. |
| 48 | FDFCT | I | Terminal for connecting capacitor for time constant in case of defect. |

# CIRCUIT DESCRIPTION

## 5. Digital Signal Processor : CXD2500AQ (IC3)

### Outline

The CXD2500AQ is a digital signal processing LSI for a compact disc player, which has the following functions.

- A wide frame jitter margin realized by 32-KRAM (±28 frames)
- Bit clocks for strobing EFM signal are generated by the digital PLL, and the capture range is ±150kHz minumum
- Demodulation of EFM data
- Protection and reinforcement of EFM frame sync signal
- Strong error correction by refined super strategy. C1 : Double correction, C2 : Quadruple correction
- Double-speed replay and variable pitch replay
- Reduction of noise generation at track jumps
- Auto zero cross muting
- Demodulation of sub-code and detection of errors in sub-code Q data
- Digital spindle servo (Having over-sampling filter)
- 16-bit traverse counter
- CPU interface by serial bus
- A built-in servo auto sequencer
- Output for digital audio interface
- Built-in digital level meter and peak meter
- Applicable to bilingual system

### Features

- One chip of this LSI can process all the digital signals used for replay
- Integration level can be heightened because of the built-in RAM

### Structure

Silicon gate CMOS

### 5-1. Block diagram

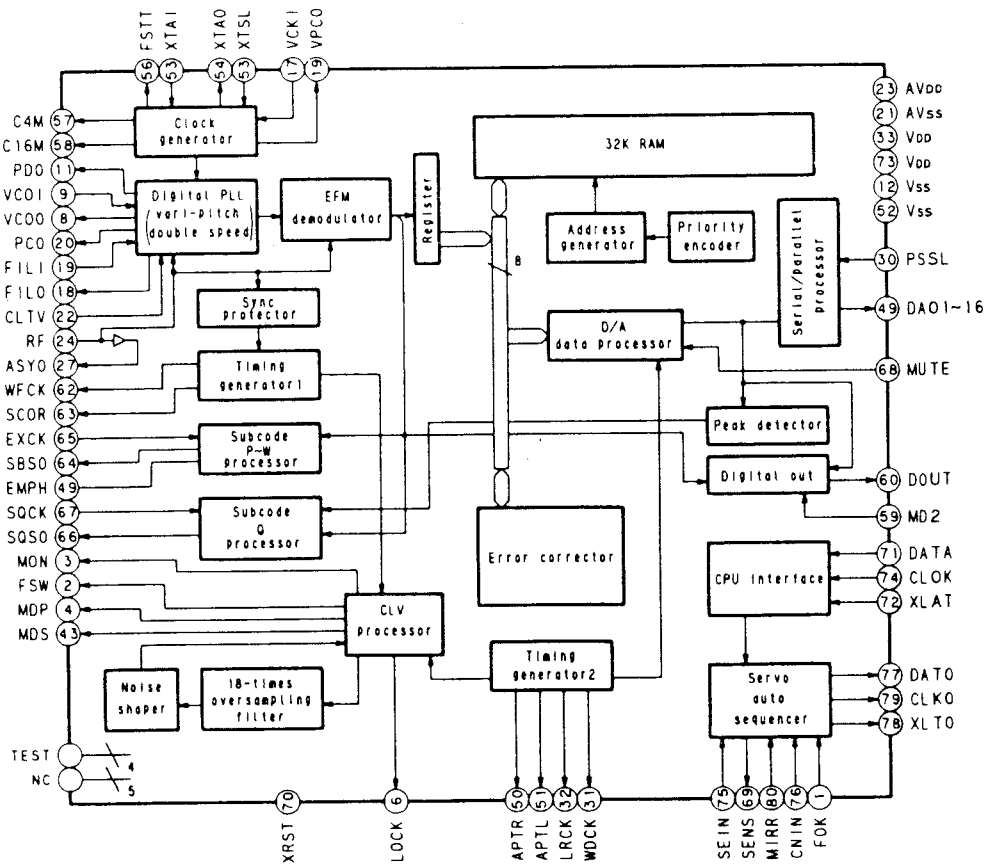

# CIRCUIT DESCRIPTION

## 5-2. Pin functions

| Pin No. | Pin name | I/O | Function |
|---|---|---|---|
| 1 | FOK | I | Focus OK input terminal. Used for SENS output and servo auto sequencer. |
| 2 | FSW | O | Output for changing output filter of spindle motor. |
| 3 | MON | O | ON/OFF control output of spindle motor. |
| 4 | MDP | O | Servo control of spindle motor. |
| 5 | MDS | O | Servo control of spindle motor. |
| 6 | LOCK | O | Outputs "H", when GFS is sampled at 460Hz and it is "H". Output "L", if "L" is detected eight times continuously. |
| 7 | NC | – | Not used. |
| 8 | VCOO | O | Oscillation circuit output for analog EFM PLL. |
| 9 | VCOI | I | Oscillation circuit input for analog EFM PLL. $f_{LOCK}$ = 8.6436MHz |
| 10 | TEST | I | Test terminal, normally grounded. |
| 11 | PDO | O | Charge pump output for analog EFM PLL. |
| 12 | $V_{SS}$ | – | GND. |
| 13~15 | NC | – | Not used. |
| 16 | VPCO | O | PLL charge pump output for variable pitch. |
| 17 | VCKI | I | Clock input $f_{Ccenter}$ = 16.9344MHz from outside VCO for variable pitch. |
| 18 | FILO | O | Filter output for master PLL (Slave = Digital PLL). |
| 19 | FILI | I | Filter input for master PLL. |
| 20 | PCO | O | Charge pump output for master PLL. |
| 21 | $AV_{SS}$ | – | Analog GND. |
| 22 | CLTV | I | VCO control voltage input for master. |
| 23 | $AV_{DD}$ | – | Analog power source (+5V). |
| 24 | RF | I | EFM signal input. |
| 25 | TEST2 | I | Used for grounding. |
| 26 | TEST3 | I | Used for grounding. |
| 27 | ASYO | O | EFM full swing output ("L" = $V_{SS}$, "H" = $V_{DD}$). |
| 28 | TEST4 | I | Used for grounding. |
| 29 | NC | – | Not used. |
| 30 | PSSL | I | Audio data output mode changing input. Set to "L" for serial output and "H" for parallel output. |
| 31 | WDCK | O | D/A interface for 48-bit slot. Word clock f = 2 Fs |
| 32 | LRCK | O | D/A interface for 48-bit slot. LR clock f = Fs |
| 33 | $V_{DD}$ | – | Source voltage (+5V). |
| 34 | DA16 | O | Outputs DA16 (MSB) when PSSL = 1. Outputs serial data of 48-bit slot when PSSL = 0. (2s' COMP, MSB first) |
| 35 | DA15 | O | Outputs DA15 when PSSL = 1. Outputs bit clock of 48-bit slot when PSSL = 0. |
| 36 | DA14 | O | Outputs DA14 when PSSL = 1. Outputs serial data of 64-bit slot when PSSL = 0. (2s' COMP, LSB first) |
| 37 | DA13 | O | Outputs DA13 when PSSL = 1. Outputs bit clock of 64-bit slot when PSSL = 0. |
| 38 | DA12 | O | Outputs DA12 when PSSL = 1. Outputs LR clock of 64-bit slot when PSSL = 0. |
| 39 | DA11 | O | Outputs DA11 when PSSL = 1. Outputs GTOP when PSSL = 0. |
| 40 | DA10 | O | Outputs DA10 when PSSL = 1. Outputs XUGF when PSSL = 0. |
| 41 | DA09 | O | Outputs DA09 when PSSL = 1. Outputs XPLCK when PSSL = 0. |
| 42 | DA08 | O | Outputs DA08 when PSSL = 1. Outputs GFS when PSSL = 0. |
| 43 | DA07 | O | Outputs DA07 when PSSL = 1. Outputs RFCK when PSSL = 0. |
| 44 | DA06 | O | Outputs DA06 when PSSL = 1. Outputs C2P0 when PSSL = 0. |
| 45 | DA05 | O | Outputs DA05 when PSSL = 1. Outputs XRAOF when PSSL = 0. |
| 46 | DA04 | O | Outputs DA04 when PSSL = 1. Outputs MNT3 when PSSL = 0. |
| 47 | DA03 | O | Outputs DA03 when PSSL = 1. Outputs MNT2 when PSSL = 0. |
| 48 | DA02 | O | Outputs DA02 when PSSL = 1. Outputs MNT1 when PSSL = 0. |
| 49 | DA01 | O | Outputs DA01 when PSSL = 1. Outputs MNT0 when PSSL = 0. |

# CIRCUIT DESCRIPTION

| Pin No. | Pin name | I/O | Function |
|---|---|---|---|
| 50 | APTR | O | Control output for correcting aperture. Set to "H" when Rch. |
| 51 | APTL | O | Control output for correcting aperture. Set to "H" when Lch. |
| 52 | Vss | – | GND. |
| 53 | XTAI | I | X'tal oscillation circuit input of 16.9344MHz, or input of 33.8688MHz. |
| 54 | XTAO | O | X'tal oscillation circuit output of 16.9344MHz. |
| 55 | XTSL | I | X'tal selection input terminal. Set to "L" when x'tal is 16.9344MHz, and to "H" when 33.8688MHz. |
| 56 | FSTT | O | 2/3 division output of terminals 53 and 54. Does not vary as pitch varies. |
| 57 | C4M | O | 4.2336MHz output. Varies as pitch varies. |
| 58 | C16M | O | 16.9344MHz output. Varies as pitch varies. |
| 59 | MD2 | I | Digital-out ON/OFF control. Turns on when "H", and off when "L". |
| 60 | DOUT | O | Digital-out output terminal. |
| 61 | EMPH | O | Outputs "H" when playing disc has emphasis, and "L" when the latter does not. |
| 62 | WFCK | O | WFCK (Write Frame Clock) output. |
| 63 | SCOR | O | Outputs "H" when sub-code sync S0 or S1 is detected. |
| 64 | SBSO | O | Serial output of Sub P ~ W. |
| 65 | EXCK | I | Clock input for SBSO read out. |
| 66 | SQSO | O | Sub Q 80-bit and PCM peak, and level data 16-bit output. |
| 67 | SQCK | I | Clock input for SQSO read out. |
| 68 | MUTE | I | Mutes when "H", and resets when "L". |
| 69 | SENS | – | Outputs SENS to CPU. |
| 70 | XRST | I | Resets system when "L". |
| 71 | DATA | I | Inputs serial data from CPU. |
| 72 | XLAT | I | Latches serial data when latch input from CPU falls. |
| 73 | VDD | – | Power supply (+5V). |
| 74 | CLOK | I | Serial data transfer clock input from CPU. |
| 75 | SEIN | I | Input SENS from SSP. |
| 76 | CNIN | I | Inputs signals for counting number of track jumps. |
| 77 | DATO | O | Outputs serial data to SSP. |
| 78 | XLTO | O | Outputs serial data latch to SSP, and latches at fall. |
| 79 | CLKO | O | Outputs serial data transfer clock to SSP. |
| 80 | MIRR | I | Inputs mirror signal. Auto sequencer uses this for jumping 128 or more tracks. |

Notes

- The 64-bit slot is 2's compliment output of LSB first, and the 48-bit slot is 2's compliment output of MSB first.
- GTOP is used to monitor the protective condition of the frame sync. ("H" : Sync protective window is released.)
- XUGF is the frame sync obtained from the EFM signal, which is a negative pulse. This is the signal before the protection of sync.
- XPLCK is the inverted clock of EFM PLL. PLL is so made that the falling edge will be matched to the change point of the EFM signal.
- The GFS becomes "H" when the frame sync is matched to the internal protection timing.
- RFCK is a signal having the period of 136μ obtained by the accuracy of X'tal.
- C2P0 is a signal indicating the error condition of data.
- XRAOF is a signal generated when 32 KRAM exceeds the jitter margin of ±28F.

# CIRCUIT DESCRIPTION

## 6. D/A converter : TC9237BF (IC4)

### 6-1. Terminal connection diagram

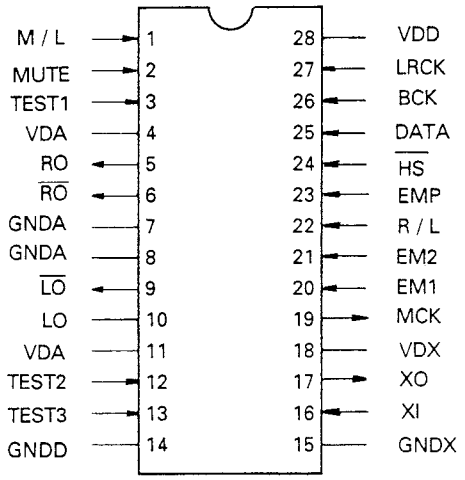


### 6-2. Block diagram

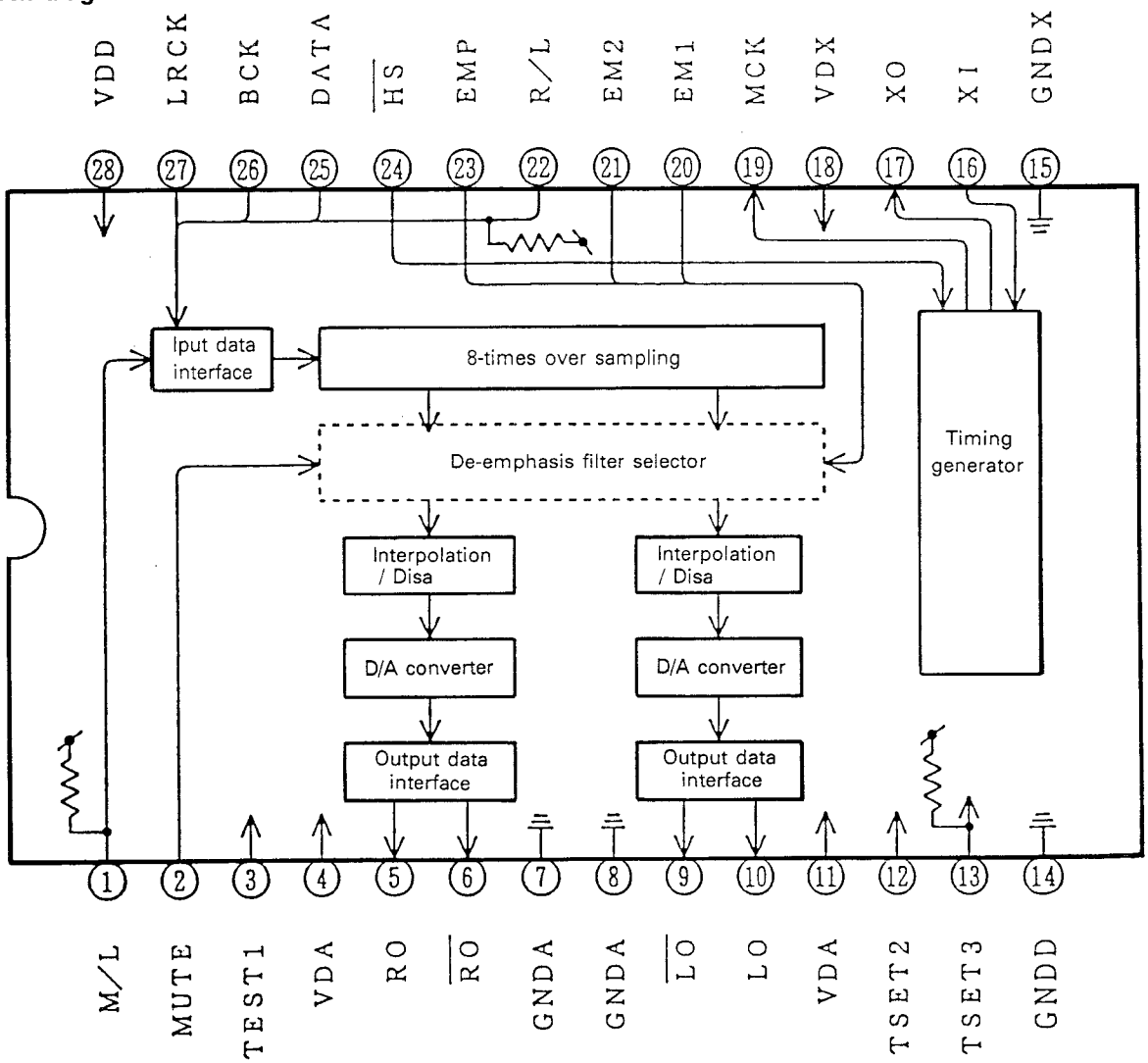

# CIRCUIT DESCRIPTION

## 6-3. Pin functions

| Pin No. | Pin name | I/O | Function |
|---|---|---|---|
| 1 | M/L | I | Selection of MSB first or LSB first. H = MSB, L = LSB. |
| 2 | MUTE | I | Muting control. H = Mute ON |
| 3 | TEST1 | I | Test terminal (connect to H level). |
| 4 | VDA | – | Power supply for analog circuit (R-ch). |
| 5 | RO | O | R-ch data output. |
| 6 | $\overline{RO}$ | O | Inverted R-ch output. |
| 7 | GNDA | – | Ground for analog circuit (R-ch). |
| 8 | GNDA | – | Ground for analog circuit (L-ch). |
| 9 | $\overline{LO}$ | O | Inverted L-ch data output. |
| 10 | LO | O | L-ch data output. |
| 11 | VDA | – | Power supply for analog circuit (L-ch). |
| 12 | TEST2 | I | Test terminal (connect to L level). |
| 13 | TEST3 | I | Test terminal (connect to H level or open circuit). |
| 14 | GND | – | Ground for logic. |
| 15 | GNDX | – | Ground for oscillation. |
| 16 | XI | I | Generation of clock freq (384fs). |
| 17 | XO | O | Generation of clock freq (384fs). |
| 18 | VDX | – | Power supply for oscillation. |
| 19 | MCK | O | Clock output of system (384fs). |
| 20, 21 | EM1, 2 | I | De-emphasis filter selector. |
| 22 | R / L | I | R / L-ch data selector. |
| 23 | EMP | I | De-emphasis filter ON / OFF selector (H = ON, L = OFF). |
| 24 | HS | I | Normal or Double speed selector (H = Normal, L = Double). |
| 25 | DATA | I | Data input. |
| 26 | BCK | I | Bit clock input. |
| 27 | LRCK | I | LR clock input. |
| 28 | VDD | – | Power supply for logic. |

| | | | | |
|---|---|---|---|---|
| EM1 | L | L | H | H |
| EM2 | L | H | H | L |
| Mode | 44.1kHz | 32kHz | 48kHz | |

| R / L | LRCK | |
|---|---|---|
| | LOW | HIGH |
| LOW | R-ch data | L-ch data. |
| HIGH | L-ch data | R-ch data. |

# DP-MA5/MA9

## ADJUSTMENT/REGLAGE

| No. | ITEM | INPUT SETTING | OUTPUT SETTING | PLAYER SETTING | ALIGNMENT POINT | ALIGN FOR | FIG. |
|---|---|---|---|---|---|---|---|
| 1 | TRACKING ERROR BALANCE | Test disc Type 4 | Connect an oscilloscope as follows. CH1: RF (CN3-1) CH2: TE (CN3-6) | Press the P. OPEN/CLOSE key to open the tray. Reset to TEST mode. Then, press the CHECK key. Confirm that the display is "03". | TE BALANCE VR2 | Symmetry between upper and lower patterns, or DC=0±0.05V | (a) |
| 2 | FOCUS ERROR BALANCE | Test disc Type 4 | Connect an oscilloscope as follows. CH1: RF (CN3-1) CH2: TE (CN3-6) | Press the PLAY key. Confirm that the display is "05". | FE BALANCE VR1 | Optimum eyepattern Grating is correctly a ligned with the RF level of 1.5Vp-p or more and the TE (servo open) level of 1.5Vp-p or more, the pickup is acceptable. | (b) |
| 3 | FOCUS GAIN | Test disc Type 4 Apply signal of 1kHz, 0.1Vrms to CN3 pin 2 and 3. | Connect a LPF to CN3 pin 2-3, to which connect an oscilloscope or two AC voltmeters. | Press the PLAY key. Confirm that the display is "05". | FOCUS GAIN VR3 | Two VTVMs should read the same value. | (c) |
| 4 | TRACKING GAIN | Test disc Type 4 Apply signal of 1.3kHz, 0.1Vrms to CN3 pin 5 and 6. | Connect a LPF to CN3 pin 5-6, to which connect an oscilloscope or two AC voltmeters. or two AC voltmeters. | Press the PLAY key. Confirm that the display is "05". | TRACKING GAIN VR4 | Two VTVMs should read the same value. | (c) |

(NOTE) Type 4 disc : SONY YEDS-18 TEST DISC or equivalent. LPF: around 47kohms+390pF or so. Adjustment procedures are in TEST MODE.

| N° | ARTICLE | ENTREE | SORTIE | MISE EN FONCTIONNEMENT DU LECTEUR | POINT DE CONTROLE | CRITERE D'APPRECIATION | FIG. |
|---|---|---|---|---|---|---|---|
| 1 | BALANCE D'ERREUR D'ALIGNEMENT | Disque d'essai de type 4 | Brancher un oscilloscope comme suit. CH1 : RF (CN3-1) CH2 : TE (CN3-6) | Appuyer sur la touche P.OPEN/CLOSE pour ouvrir le plateau, puis revenir au mode TEST. Appuyer ensuite sur la touche CHECK et vérifier que l'écran affiche "03". | VR2 POUR BALANCE D'ERREUR D'ALIGNEMENT | Symétrie entre les portions supérieure et inférieure de l'onde, ou 0 ±0,05V CC | (a) |
| 2 | BALANCE D'ERREUR DE FOCALISATION | Disque d'essai de type 4 | Brancher un oscilloscope comme suit. CH1 : RF (CN3-1) CH2 : TE (CN3-6) | Appuyer sur la touche PLAY. S'assurer que l'écran affiche "05". | VR1 POUR BALANCE D'ERREUR DE FOCALISATION | Trame optimale Lorsque le réseau de diffraction est correctement aligné et que le niveau de haute fréquence est égal à 1,0 Vc-c ou plus et le niveau d'erreur d'alignement (avec le servomécanisme au repos), à 1,5 Vc-c ou plus, la tête de lecture est considérée comme étant normale | (b) |
| 3 | GAIN DE FOCALISATION | Disque d'essai de type 4 Appliquer un signal de 1,0kHz, 0,1Veff. sur les broches 2 et 3 du CN3. | Brancher un filtre passe-bas aux broches 2-3 du CN3 et y connecter un oscilloscope ou deux voltmètres à CA. | Appuyer sur la touche "PLAY". S'assurer que l'écran affiche "05". | GAIN DE FOCALISATION VR3 | Deux voltmètres doivent indiquer la même valeur. | (c) |
| 4 | GAIN D'ALIGNEMENT | Disque d'essai de type 4 Appliquer un signal de 1,3kHz, 0,1Veff. aux broches 5 et 6 du CN3. | Brancher un filtre passe-bas aux broches 5-6 du CN3 et y connecter un oscilloscope ou deux voltrmètres à CA. | Appuyer sur la touche "PLAY". S'assurer que l'écran affiche "05". | GAIN D'ALIGNEMENT VR4 | Deux voltmétres doivent indiquer la même valeur. | (c) |

(NOTE)Disque de type 4 : DISQUE D'ESSAI SONY YEDS-18 ou équivalent. Filtre passe-bas : autour de 47kohms+390pF environ
La procédure de réglage est en mode TEST.

# ABGLEICH

| Nr. | Gegenstand | Eingang | Ausgang | Player | Abgleich | Abgleichen für | Abb |
|---|---|---|---|---|---|---|---|
| 1 | TRACKING-FEHLER BALANCE | Test-CD Typ 4. | Ein oszilloskop folgendermaßen anschließen: CH1 : RF (CN3-1) CH2 : TE (CN-3-6) | Zum öffnen der Lade die Taste P.OPEN/CLOSE drücken und das Gerät auf TEST-Betrieb schalten. Danach die CHECK-Taste drücken. Sicherstellen, daß auf der Anzeige "03" erscheint. | TRACKING-FEHLER BALANCE VR2 | Auf Symmetrie zwischen oberem und unterem Muster bzw. eine Gleichspannung von 0±0,05V einstellen. | (a) |
| 2 | FOKUS-FEHLER BALANCE | Test-CD Typ 4. | Ein oszilloskop folgendermaßen anschließen: CH1 : RF (CN3-1) CH2 : TRACKING-FEHLER (CN-3-6) | Die PLAY-Taste drücken und sicherstellen, daß auf der Anzeige "05" erscheint. | FOKUS-FEHLER BALANCE VR1 | Optimales Augenmuster. Der Abtaster ist zufriedenstellend bei korrekter Fluchtung der Rastereinteilung mit einem RF-Pegel von mindestens 1,5 Vss und einem TRACKING-FEHLER-Pegel (Servo unterbrochen) von mindestens 1,5 Vss. | (b) |
| 2 | FOKUS-VERSTÄRKUNG | Test-Disc Typ 4. Den Kontakten 2 und 3 von CN3 ein Signal von 1,0kHz, 0,1Veff zuleiten. | Ein Tiefpaßfilter an die Kontakte 2 und 3 von CN3 anschließen, und ein Oszilloskop oder zwei Wechselstrom-Voltmeter anschließen. | Die PLAY-Taste drücken. Sicherstellen, daß im Display "05" angezeigt wird. | FOCUS GAIN VR3 (Potentiometer) | Zwei VTVM müssen den gleichen Wert zeigen. | (c) |
| 3 | SPURHALTE VERSTÄRKUNG | Test-Disc Typ 4. Den Kontakten 5 und 6 von CN3 ein Signal von 1,3kHz, 0,1Veff zuleiten. | Ein Tiefpaßfilter an die Kontakte 5 und 6 von CN3 anschließen, und ein Oszilloskop oder zwei Wechselstrom-Voltmeter anschließen. | Die PLAY-Taste drücken. Sicherstellen, daß im Display "05" angezeigt wird. | TRACKING GAIN VR4 (Potentiometer) | Zwei VTVM müssen den gleichen Wert zeigen. | (c) |

(Zur Beachtung) Test-Disc Typ 4 : Sony YEDS-18 Test-Disc oder gleichwertig. Tiefpaßfilter : ca. 47kOhm+390pF.
Einstellverfahren im prüfbetrieb (TEST MODE).

## (c)Focus Gain and Tracking Gain Adj.

**Focus gain adj.**

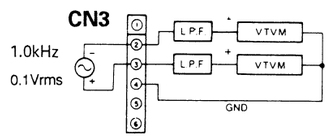


**Tracking gain adj.**

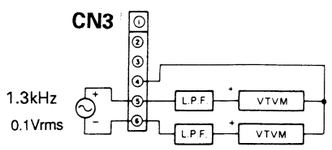






# ADJUSTMENT

**RF level Wave-form**

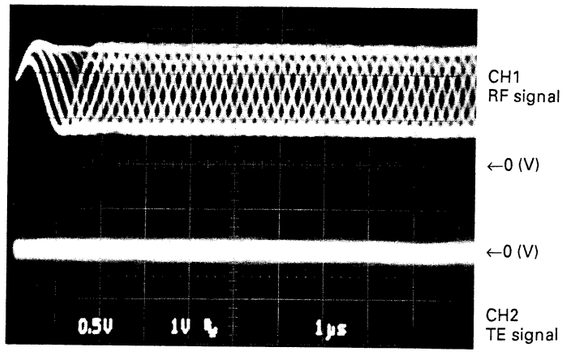


- RF signal and E.Spot signal in test mode (PLAY).

**Tracking error balance**

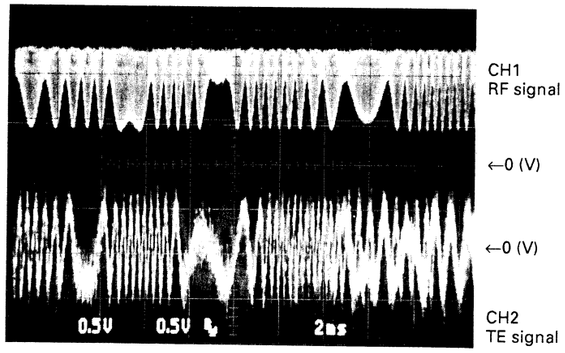


- RF signal and T.Error signal; in test mode (Focusing ON). (Disc type 4)
- Adjust T.Error so that the waveform is symmetrical above and below 0V (VR2).

**Focus error balance**

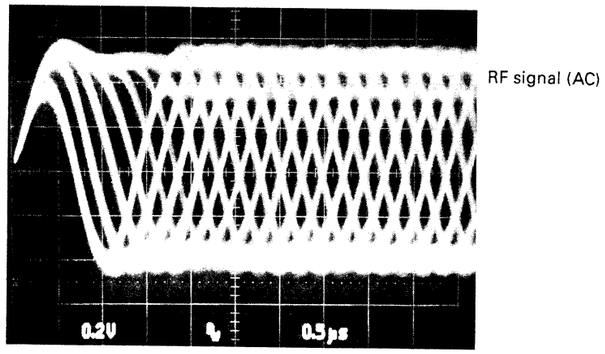


- RF signal in test mode (PLAY).
- Perform the tangential and focusing offset adjustments so that each of the center cross points are focused into one point on the display. The crossing points above and below the center shall also be displayed clearly.

# PC BOARD (COMPONENT SIDE VIEW)

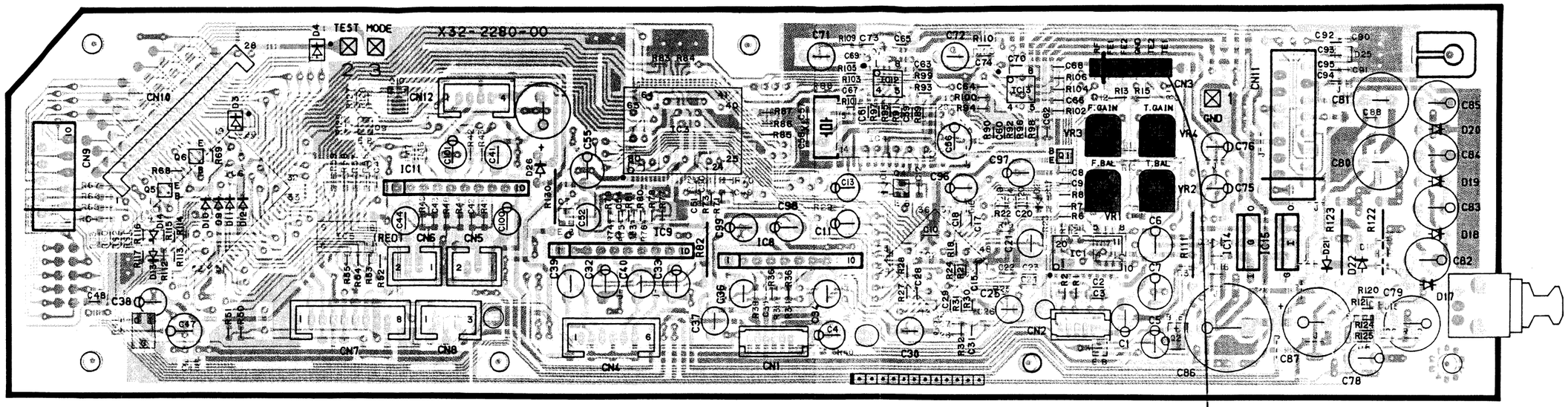


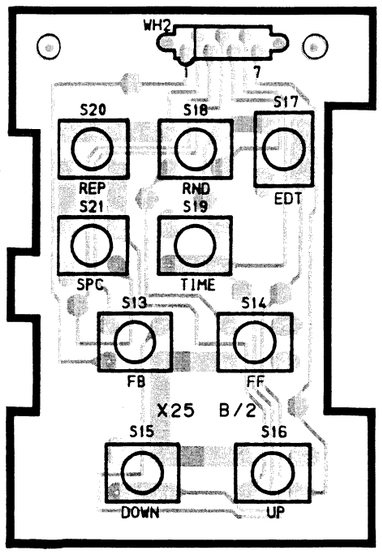


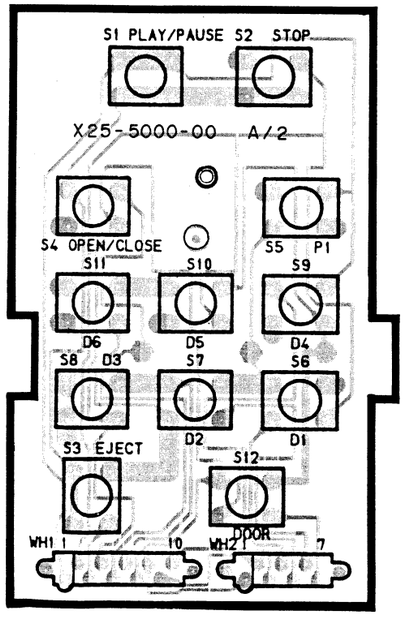


Refer to the schematic diagram for the values of resistors and capacitors.



(a) Tracking error balance : Symmetry between upper and lower or DC = 0 ± 0.05V

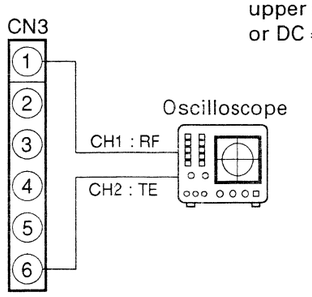


(b) Focus error balance : Optimum eye pattern

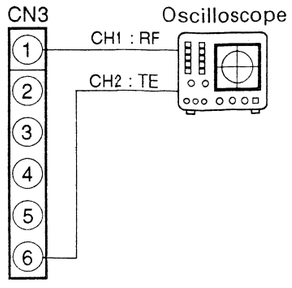


(c) Focus gain : Two VTVMs should read the same value.

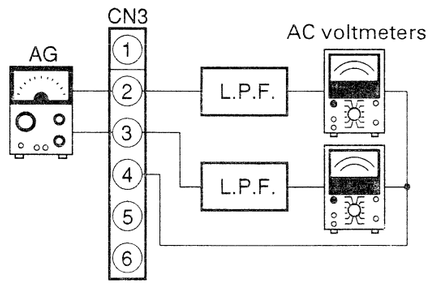


(c) Tracking gain : Two VTVMs should read the same value.

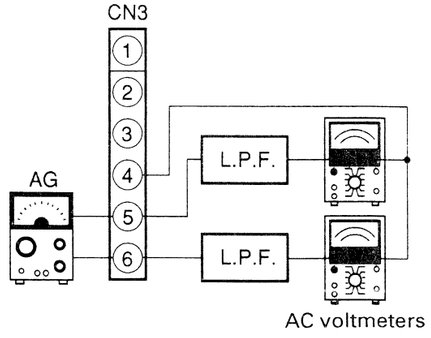

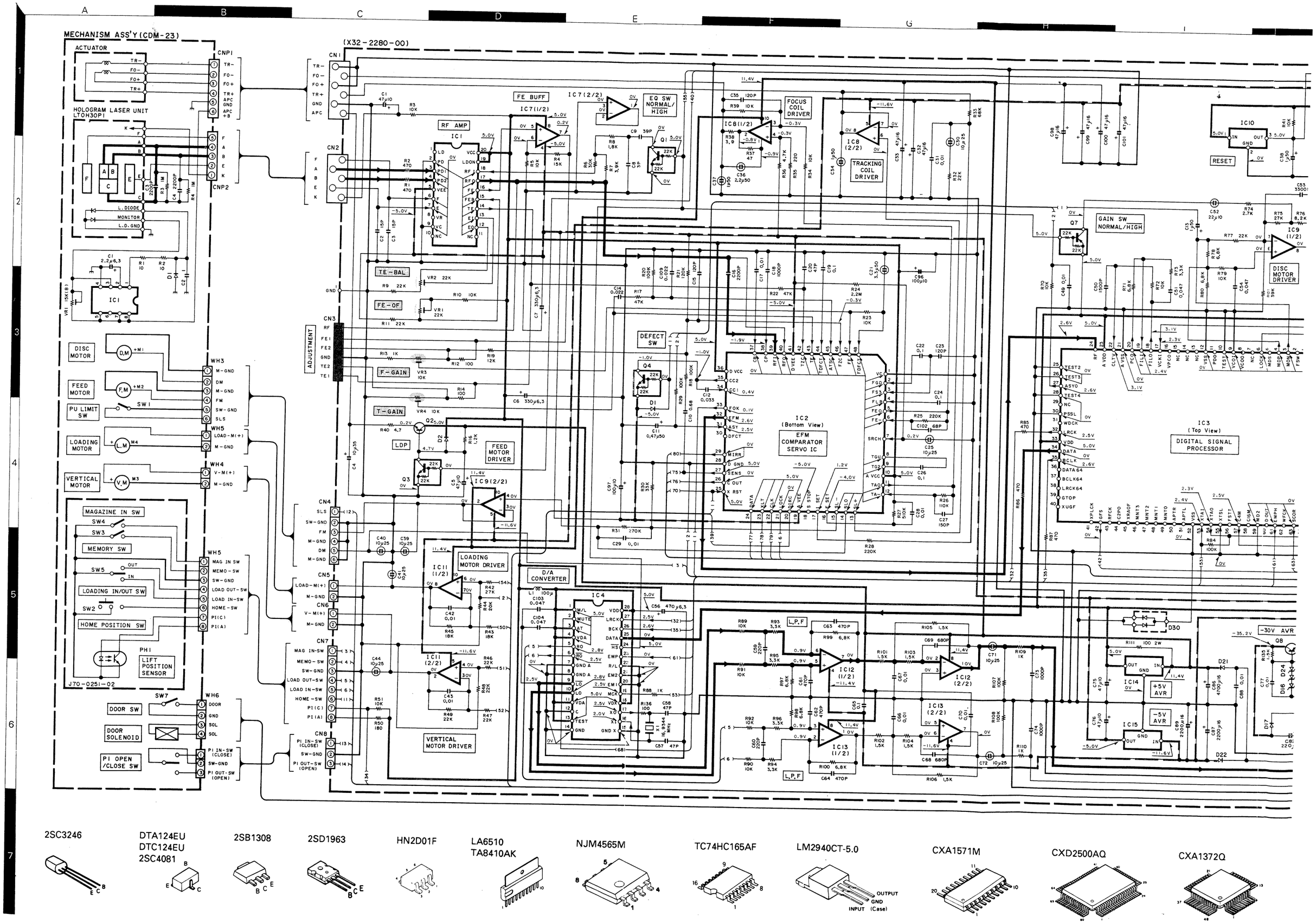


2SC3246



DTA124EU
DTC124EU
2SC4081



2SB1308



2SD1963



HN2D01F



LA6510
TA8410AK



NJM4565M



TC74HC165AF



LM2940CT-5.0




CXA1571M



CXD2500AQ

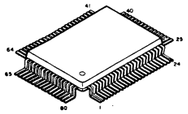

CXA1372Q

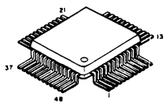

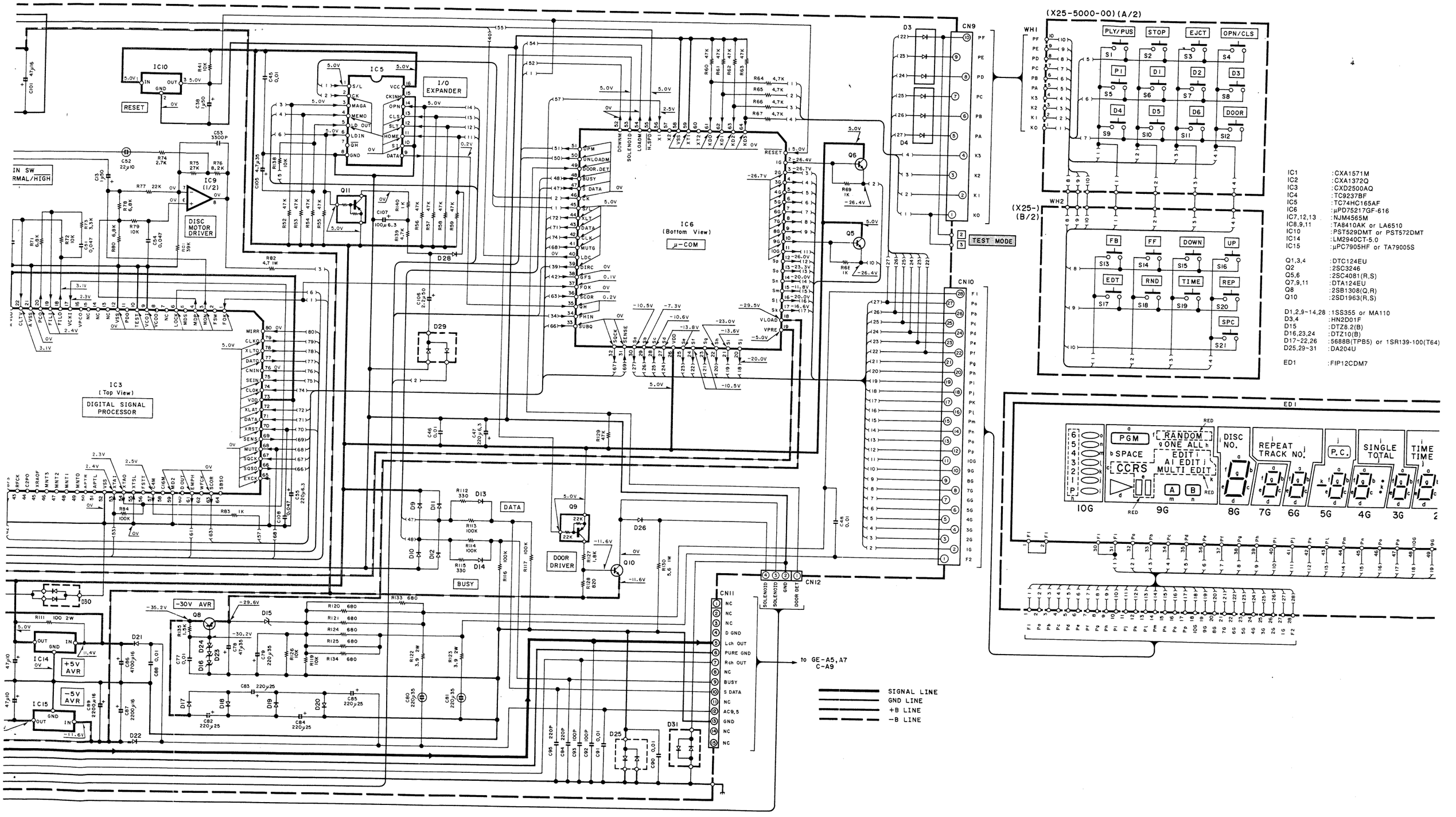


| | |
|---|---|
| IC1 | :CXA1571M |
| IC2 | :CXA1372Q |
| IC3 | :CXD2500AQ |
| IC4 | :TC9237BF |
| IC5 | :TC74HC165AF |
| IC6 | :μPD75217GF-616 |
| IC7,12,13 | :NJM4565M |
| IC8,9,11 | :TA8410AK or LA6510 |
| IC10 | :PST529DMT or PST572DMT |
| IC14 | :LM2940CT-5.0 |
| IC15 | :μPC7905HF or TA79005S |
| Q1,3,4 | :DTC124EU |
| Q2 | :2SC3246 |
| Q5,6 | :2SC4081(R,S) |
| Q7,9,11 | :DTA124EU |
| Q8 | :2SB1308(Q,R) |
| Q10 | :2SD1963(R,S) |
| D1,2,9~14,28 | :1SS355 or MA110 |
| D3,4 | :HN2D01F |
| D15 | :DTZ8.2(B) |
| D16,23,24 | :DTZ10(B) |
| D17~22,26 | :5688B(TPB5) or 1SR139-100(T64) |
| D25,29~31 | :DA204U |
| ED1 | :FIP12CDM7 |

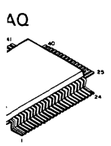


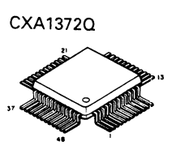


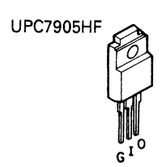


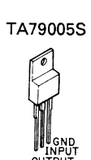

**CAUTION** : For continued safety, replace safety critical components only with manufacturer's recommended parts (refer to parts list). ⚠ Indicates safety critical components. To reduce the risk of electric shock, leakage-current or resistance measurements shall be carried out (exposed parts are acceptably insulated from the supply circuit) before the appliance is returned to the customer.

- DC voltages are as measured with a high impedance voltmeter. Values may vary slightly due to variations between individual instruments or/and units

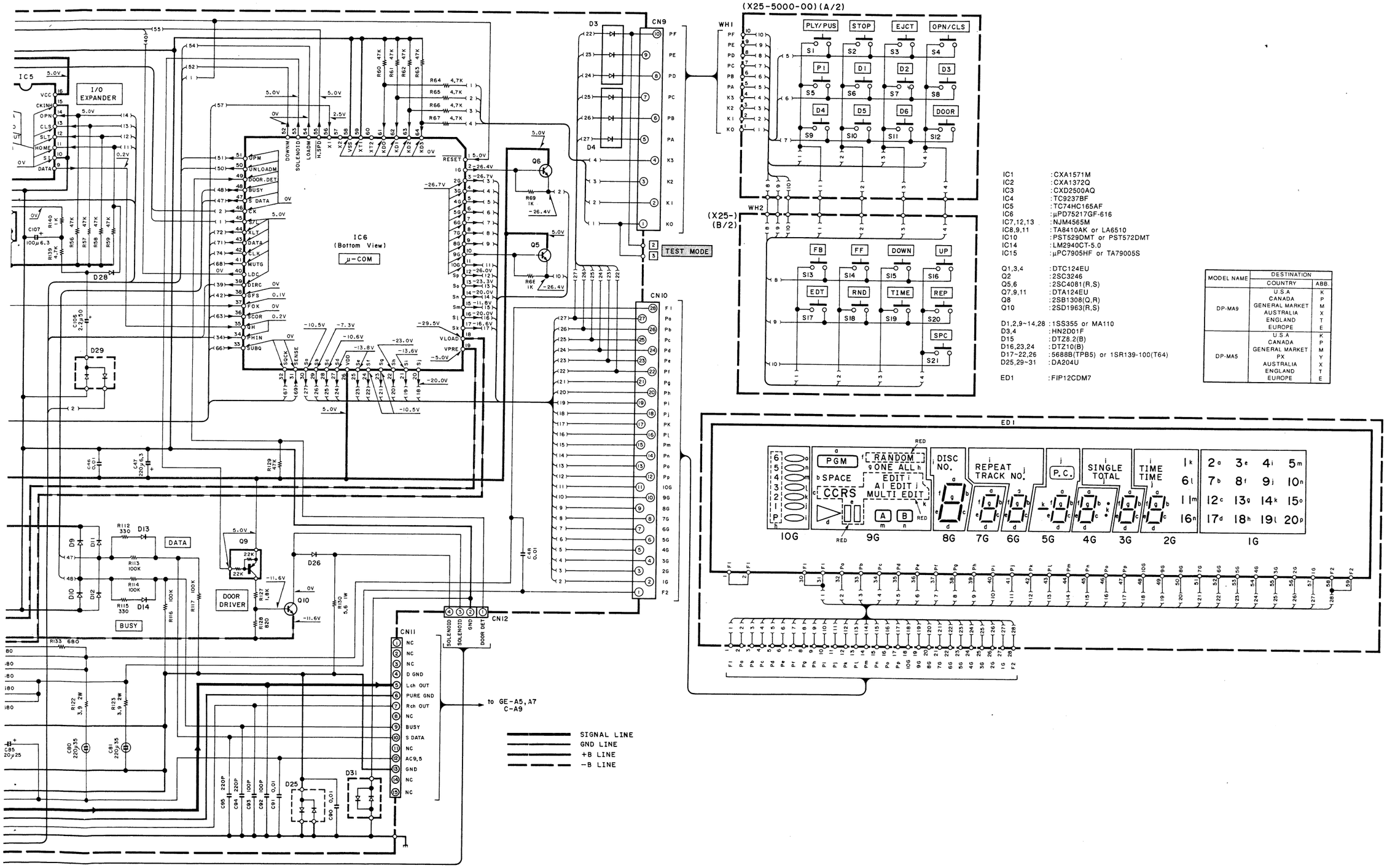


| MODEL NAME | DESTINATION | |
|---|---|---|
| | COUNTRY | ABB. |
| DP-MA9 | U.S.A | K |
| | CANADA | P |
| | GENERAL MARKET | M |
| | AUSTRALIA | X |
| | ENGLAND | T |
| | EUROPE | E |
| DP-MA5 | U.S.A | K |
| | CANADA | P |
| | GENERAL MARKET | M |
| | PX | Y |
| | AUSTRALIA | X |
| | ENGLAND | T |
| | EUROPE | E |

IC1 :CXA1571M
IC2 :CXA1372Q
IC3 :CXD2500AQ
IC4 :TC9237BF
IC5 :TC74HC165AF
IC6 :μPD75217GF-616
IC7,12,13 :NJM4565M
IC8,9,11 :TA8410AK or LA6510
IC10 :PST529DMT or PST572DMT
IC14 :LM2940CT-5.0
IC15 :μPC7905HF or TA79005S

Q1,3,4 :DTC124EU
Q2 :2SC3246
Q5,6 :2SC4081(R,S)
Q7,9,11 :DTA124EU
Q8 :2SB1308(Q,R)
Q10 :2SD1963(R,S)

D1,2,9~14,28 :1SS355 or MA110
D3,4 :HN2D01F
D15 :DTZ8.2(B)
D16,23,24 :DTZ10(B)
D17~22,26 :5688B(TPB5) or 1SR139-100(T64)
D25,29~31 :DA204U

ED1 :FIP12CDM7

DP-MA9/MA5 (J)/(K)

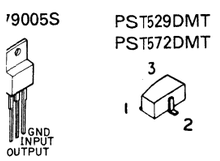


**CAUTION :** For continued safety, replace safety critical components only with manufacturer's recommended parts (refer to parts list). ⚠ Indicates safety critical components. To reduce the risk of electric shock, leakage-current or resistance measurements shall be carried out (exposed parts are acceptably insulated from the supply circuit) before the appliance is returned to the customer.

- DC voltages are as measured with a high impedance voltmeter. Values may vary slightly due to variations between individual instruments or/and units

Y22-3080-11

# DP-MA5/MA9

KENWOOD

DP-MA5/MA9 DP-MA5/MA9

## EXPLODED VIEW (MECHANISM)

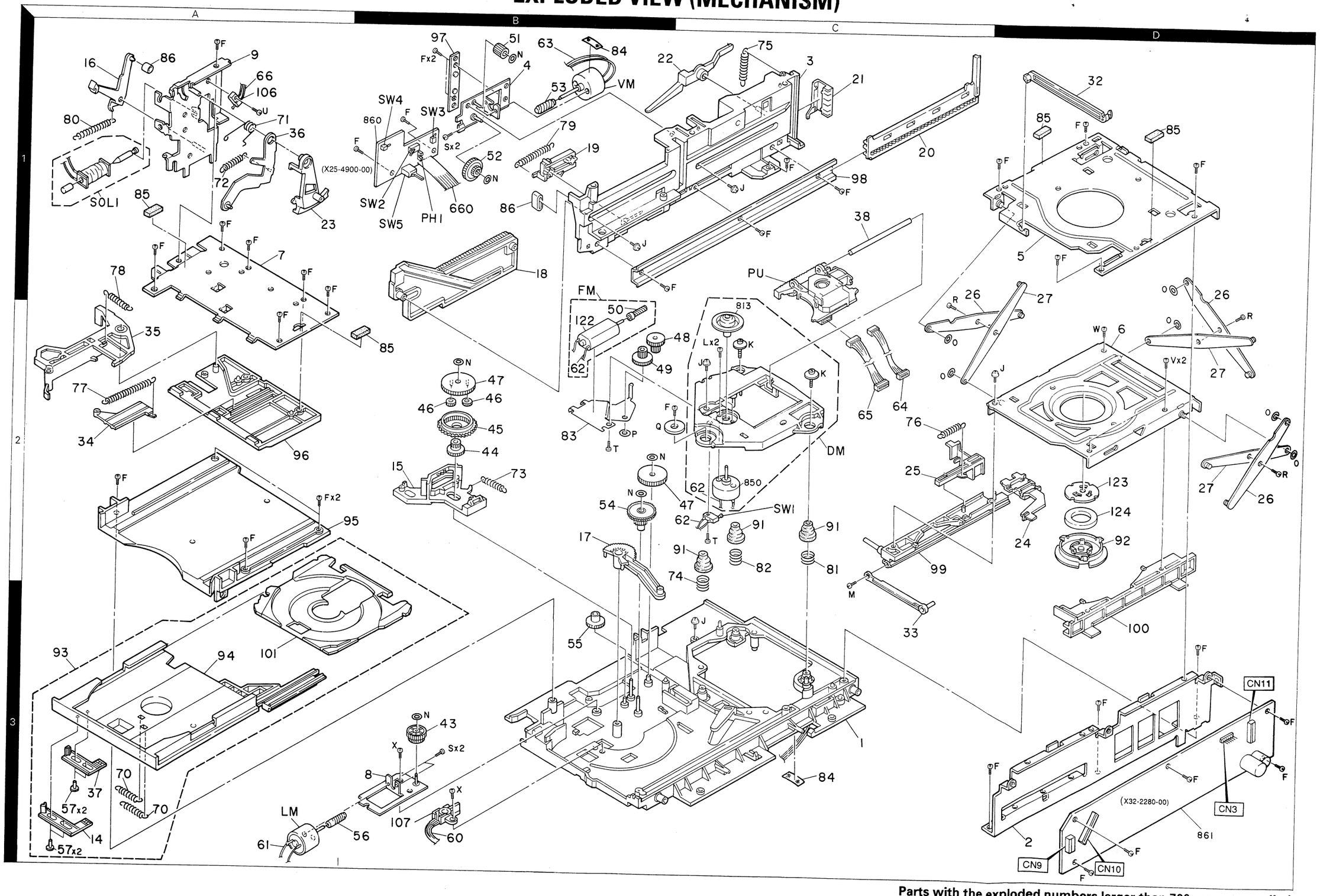


Parts with the exploded numbers larger than 700 are not supplied.

## EXPLODED VIEW (UNIT)

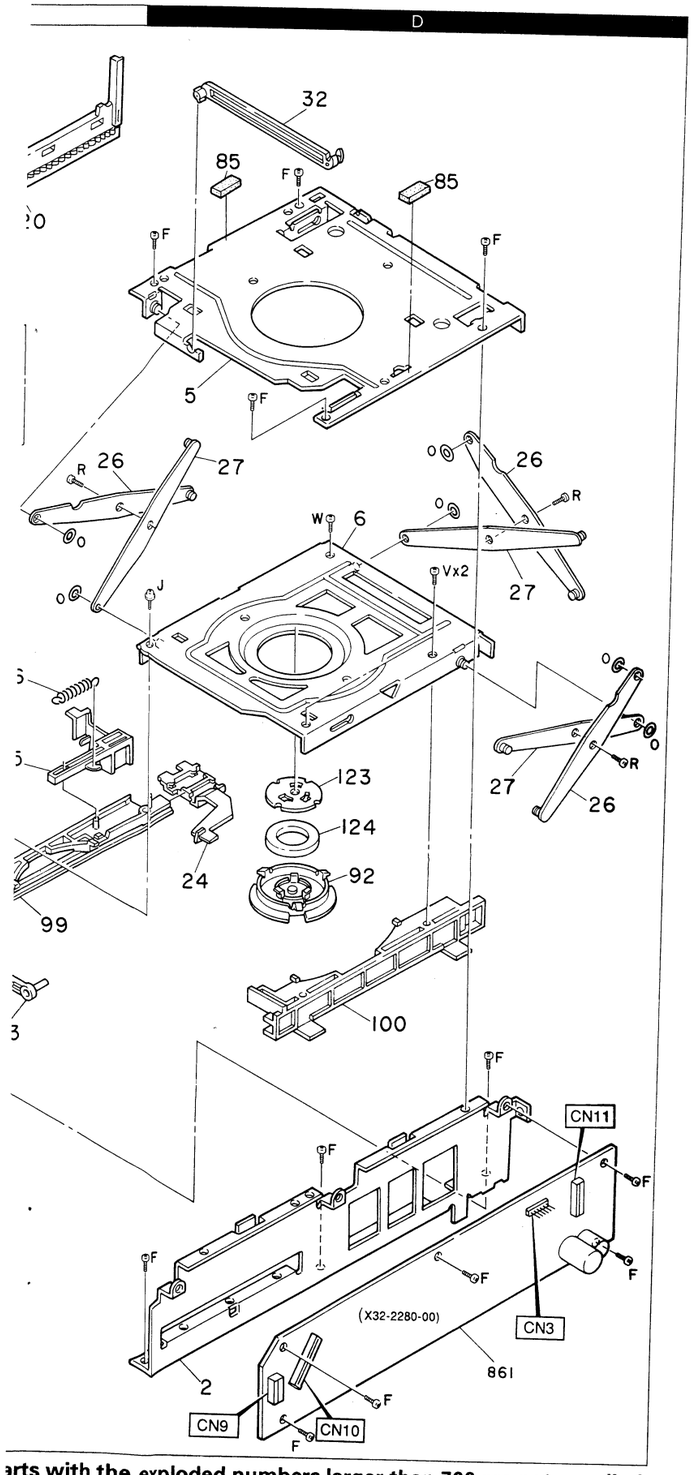


arts with the exploded numbers larger than 700 are not supplied.

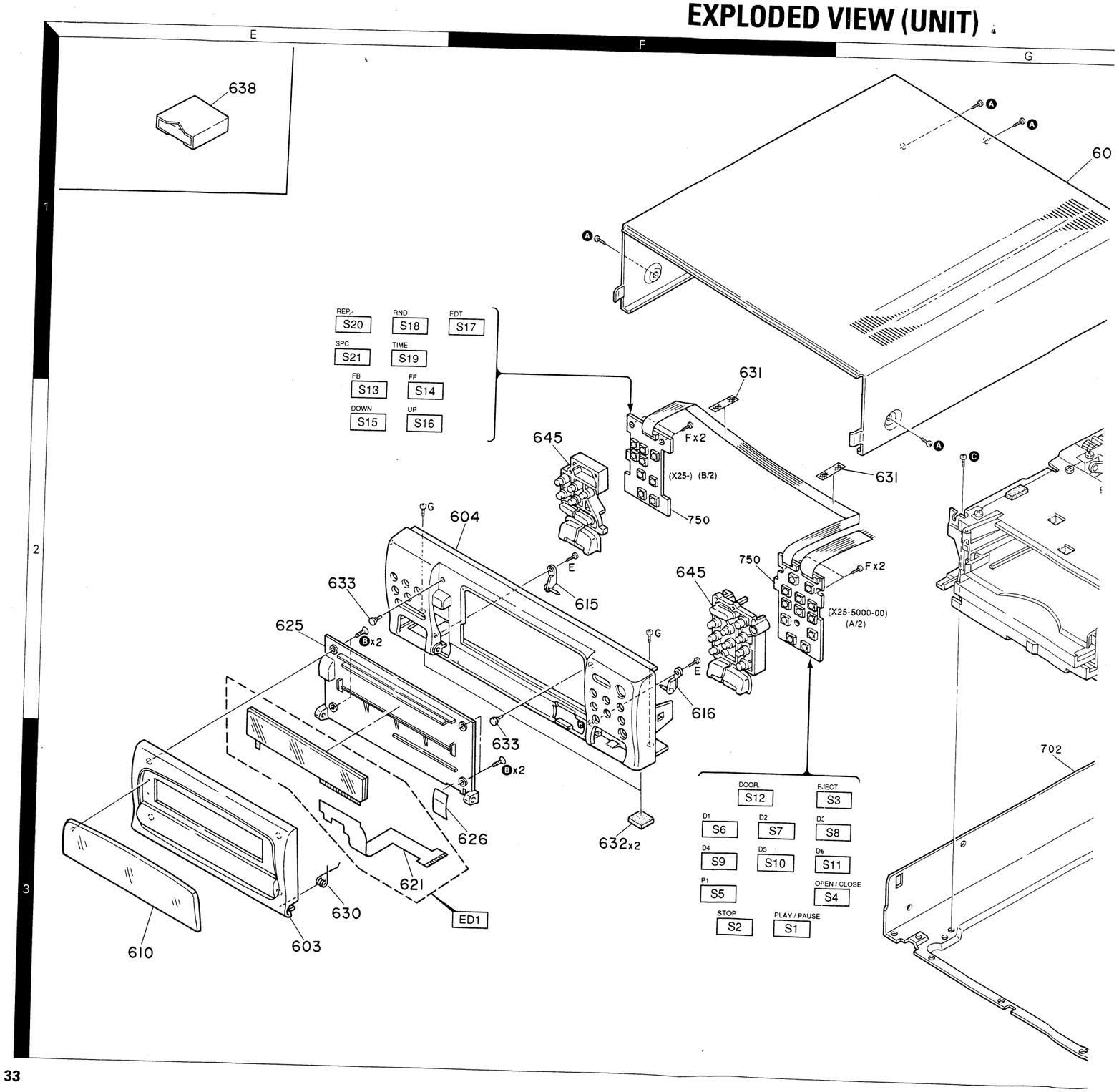

# EXPLODED VIEW (UNIT)

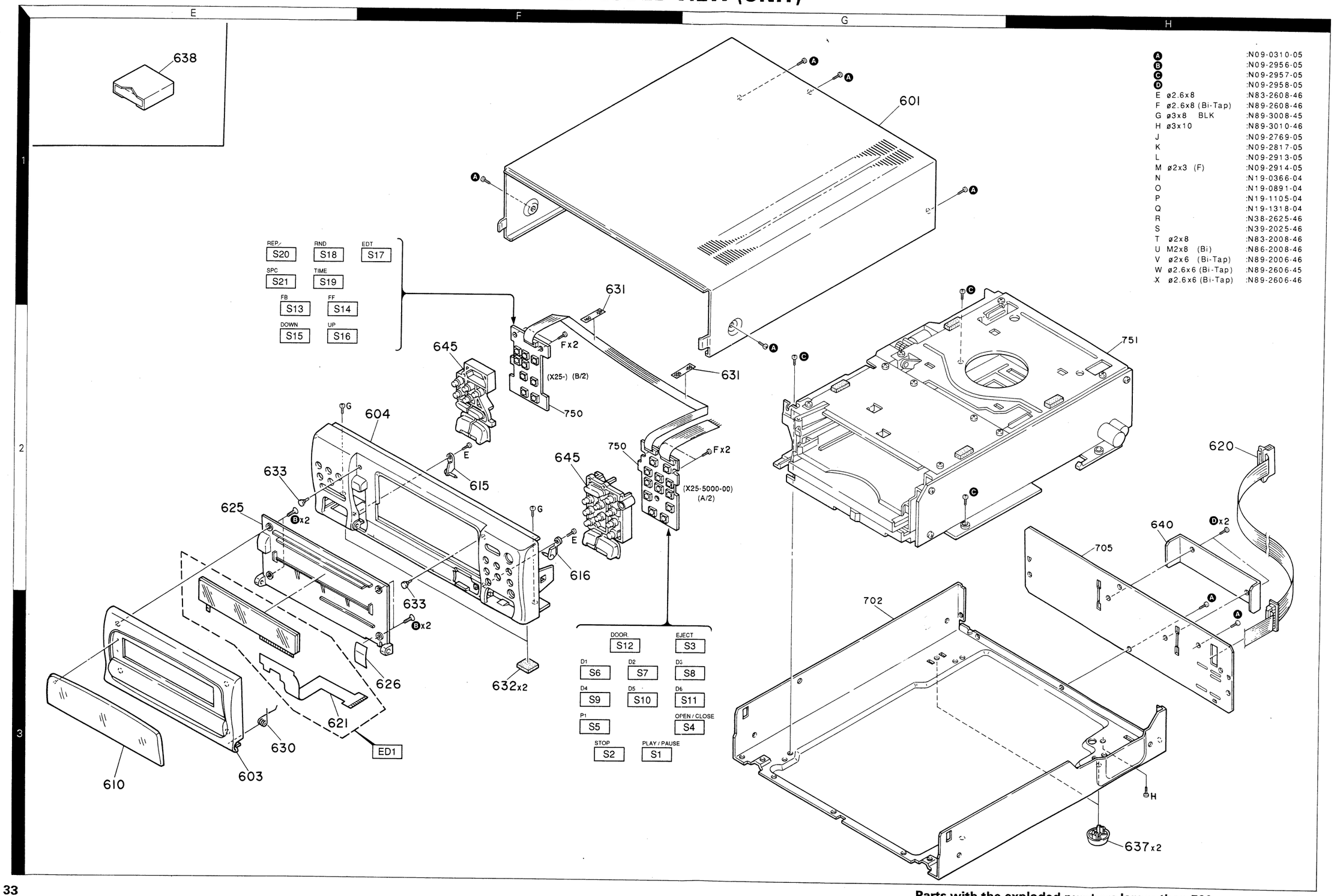


| | |
|---|---|
| A | :N09-0310-05 |
| B | :N09-2956-05 |
| C | :N09-2957-05 |
| D | :N09-2958-05 |
| E ø2.6x8 | :N83-2608-46 |
| F ø2.6x8 (Bi-Tap) | :N89-2608-46 |
| G ø3x8 BLK | :N89-3008-45 |
| H ø3x10 | :N89-3010-46 |
| J | :N09-2769-05 |
| K | :N09-2817-05 |
| L | :N09-2913-05 |
| M ø2x3 (F) | :N09-2914-05 |
| N | :N19-0366-04 |
| O | :N19-0891-04 |
| P | :N19-1105-04 |
| Q | :N19-1318-04 |
| R | :N38-2625-46 |
| S | :N39-2025-46 |
| T ø2x8 | :N83-2008-46 |
| U M2x8 (Bi) | :N86-2008-46 |
| V ø2x6 (Bi-Tap) | :N89-2006-46 |
| W ø2.6x6 (Bi-Tap) | :N89-2606-45 |
| X ø2.6x6 (Bi-Tap) | :N89-2606-46 |



**Parts with the exploded numbers larger than 700 are not supplied.**

# PARTS LIST

* New Parts
Parts without Parts No. are not supplied.
Les articles non mentionnes dans le Parts No. ne sont pas fournis.
Teile onne Parts No. werden nicht geliefert.

| Ref. No. 参照番号 | Address 位置 | New Parts 新 | Parts No. 部品番号 | Description 部品名／規格 | Destination 仕向 | Remarks 備考 |
|---|---|---|---|---|---|---|
| **DP-MA5** | | | | | | |
| 601 | 1G | * | A01-2970-01 | METALLIC CABINET | | |
| 603 | 3E | * | A29-0319-12 | PANEL | | |
| 604 | 2F | * | A60-0291-11 | PANEL | | |
| 610 | 3E | | B10-0972-04 | FRONT GLASS | | |
| - | | | B46-0122-23 | WARRANTY CARD | E | |
| - | | | B46-0143-13 | WARRANTY CARD | T | |
| - | | * | B59-0179-04 | CAUTION CARD | | |
| 615 | 2F | * | D19-0274-04 | PIN | | |
| 616 | 2F | * | D19-0275-04 | PIN | | |
| 620 | | * | E30-2713-05 | CORD WITH CONNECTOR | | |
| 621 | 3E | * | E35-0385-04 | FRAT CABLE | | |
| 625 | 2E | * | F07-0700-13 | COVER | | |
| 626 | 3F | * | F19-1036-04 | BLIND PLATE | | |
| 630 | 3E | * | G09-0625-14 | SPRING | | |
| 631 | 1F,2G | | G10-0173-04 | NON-WOVEN FABRIC | | |
| 632 | 3F | | G11-2052-14 | CUSHION | | |
| 633 | 2E,3F | | G13-0182-04 | CUSHION | | |
| - | | * | H10-5360-12 | POLYSTYRENE FOAMED FIXTURE | | |
| - | | * | H10-5361-12 | POLYSTYRENE FOAMED FIXTURE | | |
| - | | | H20-0576-04 | PROTECTION COVER | M | |
| - | | | H25-0681-04 | PROTECTION BAG | KPYXTE | |
| - | | * | H30-0077-04 | ADHESIVE DOUBLE-COATED TAPE | | |
| - | | * | H50-0459-04 | ITEM CARTON CASE | KPMYX | |
| 637 | 3H | | J02-0370-05 | FOOT | | |
| 638 | 1E | * | J19-3394-13 | HOLDER ASSY | | |
| 640 | 2H | | J21-5947-04 | WIRE BAND | | |
| 645 | 2F | * | K29-4457-12 | KNOB | | |
| ED1 | 3F | * | FIP12CDM7 | INDICATOR TUBE | | |
| **DP-MA9** | | | | | | |
| 601 | 1G | * | A01-2970-01 | METALLIC CABINET | | |
| 603 | 3E | * | A29-0318-12 | PANEL | | |
| 604 | 2F | * | A60-0290-11 | PANEL | | |
| 610 | 3E | * | B10-1934-03 | FRONT GLASS | | |
| - | | | B46-0122-23 | WARRANTY CARD | E | |
| - | | | B46-0143-13 | WARRANTY CARD | T | |
| - | | * | B59-0179-04 | CAUTION CARD | | |
| 615 | 2F | * | D19-0274-04 | PIN | | |
| 616 | 2F | * | D19-0275-04 | PIN | | |
| 620 | 2H | * | E30-2713-05 | CORD WITH CONNECTOR | | |
| 621 | 3E | * | E35-0435-08 | WIRING HARNESS | | |
| 625 | 2E | * | F07-0700-13 | COVER | | |
| 626 | 3F | * | F19-1036-04 | BLIND PLATE | | |
| 630 | 3E | * | G09-0625-14 | SPRING | | |
| 631 | 1F,2G | | G10-0173-04 | NON-WOVEN FABRIC | | |
| 632 | 3F | | G11-2052-14 | CUSHION | | |
| 633 | 2E,3F | | G13-0182-04 | CUSHION | | |

**L:**Scandinavia **K:**USA **P:**Canada
**Y:**PX(Far East, Hawaii) **T:**England **E:**Europe
**Y:**AAFES(Europe) **X:**Australia **M:**Other Areas

⚠ indicates safety critical components.

# DP-MA5/MA9

## PARTS LIST

* New Parts
Parts without Parts No. are not supplied.
Les articles non mentionnes dans le Parts No. ne sont pas fournis.
Teile ohne Parts No. werden nicht geliefert.

| Ref. No. 参照番号 | Address 位置 | New Parts 新 | Parts No. 部品番号 | Description 部品名／規格 | Destination 仕向 | Remarks 備考 |
|---|---|---|---|---|---|---|
| - | | * | H10-5360-12 | POLYSTYRENE FOAMED FIXTURE | | |
| - | | * | H10-5361-12 | POLYSTYRENE FOAMED FIXTURE | | |
| - | | | H20-0566-04 | PROTECTION COVER | M | |
| - | | | H25-0397-04 | PROTECTION BAG | KPXE | |
| - | | | H25-0659-04 | PROTECTION BAG | T | |
| - | | * | H30-0077-04 | ADHESIVE DOUBLE-COATED TAPE | | |
| - | | * | H50-0425-04 | ITEM CARTON CASE | KPMX | |
| - | | * | H50-0458-04 | ITEM CARTON CASE | TE | |
| - | | * | H50-0460-04 | ITEM CARTON CASE | TE | |
| 637 | 3H | | J02-0370-05 | FOOT | | |
| 638 | 1E | * | J19-3394-13 | HOLDER ASSY | | |
| - | | | J61-0307-05 | WIRE BAND | | |
| 645 | 2F | * | K29-4457-12 | KNOB | | |
| ED1 | 3F | * | FIP12CDM7 | INDICATOR TUBE | | |
| **MECHANISM PCB (X25-5000-00)** | | | | | | |
| 660 | 1B | * | E35-0389-05 | WIRING HARNESS | | |
| SW2 | 1B | * | S64-0006-05 | LEVER SWITCH | | |
| SW3 ,4 | 1B | * | S68-0025-05 | PUSH SWITCH | | |
| SW5 | 1B | | S33-2062-05 | LEVER SWITCH | | |
| PH1 | 1B | | T95-0123-05 | OPTO ISOLATOR | | |
| **SWITCH (X25-5000-00)** | | | | | | |
| S1 -21 | | | S40-1064-05 | PUSH SWITCH | | |
| **CONTROL (X32-2280-00)** | | | | | | |
| C1 | | | CE04KW1A470M | ELECTRO 47UF 10WV | | |
| C2 ,3 | | | CC73FSL1H150J | CHIP C 15PF J | | |
| C4 | | | CE04KW1V100M | ELECTRO 10UF 35WV | | |
| C5 | | | CE04KW1A470M | ELECTRO 47UF 10WV | | |
| C6 ,7 | | | CE04KW0J331M | ELECTRO 330UF 6.3WV | | |
| C8 | | | CC73FSL1H030C | CHIP C 3PF C | | |
| C9 | | | CC73FSL1H390J | CHIP C 39PF J | | |
| C10 | | | CK73EF1C684Z | CHIP C 0.68UF Z | | |
| C11 | | | CE04KW1HR47M | ELECTRO 0.47UF 50WV | | |
| C12 | | | CK73FB1H333K | CHIP C 0.033UF K | | |
| C13 | | | CE04KW1H010M | ELECTRO 1.0UF 50WV | | |
| C14 | | | CK73FB1H223K | CHIP C 0.022UF K | | |
| C15 | | | CC73FSL1H121J | CHIP C 120PF J | | |
| C16 | | | CK73FB1H222K | CHIP C 2200PF K | | |
| C17 | | | CK73FB1H103K | CHIP C 0.010UF K | | |
| C18 | | | CK73FB1H102K | CHIP C 1000PF K | | |
| C19 | | | CK73FB1E104K | CHIP C 0.10UF K | | |
| C20 | | | CC73FSL1H470J | CHIP C 47PF J | | |
| C21 | | | CE04HW1H3R3M | NP-ELEC 3.3UF 50WV | | |
| C22 | | | CK73FB1E104K | CHIP C 0.10UF K | | |
| C23 | | | CC73FSL1H121J | CHIP C 120PF J | | |
| C24 | | | CK73FB1E104K | CHIP C 0.10UF K | | |
| C25 | | | CE04HW1E100M | NP-ELEC 10UF 25WV | | |
| C26 | | | CK73FB1E104K | CHIP C 0.10UF K | | |
| C27 | | | CC73FSL1H151J | CHIP C 150PF J | | |
| C28 ,29 | | | CK73FB1H103K | CHIP C 0.010UF K | | |
| C30 | | | CE04HW1E100M | NP-ELEC 10UF 25WV | | |
| C31 | | | CK73FB1H103K | CHIP C 0.010UF K | | |

L:Scandinavia K:USA P:Canada
Y:PX(Far East, Hawaii) T:England E:Europe
Y:AAFES(Europe) X:Australia M:Other Areas

⚠ indicates safety critical components.

# PARTS LIST

* New Parts
Parts without Parts No. are not supplied.
Les articles non mentionnes dans le Parts No. ne sont pas fournis.
Teile ohne Parts No. werden nicht geliefert.

| Ref. No. 参照番号 | Address 位置 | New Parts 新 | Parts No. 部品番号 | Description 部品名／規格 | | | Destination 仕向 | Remarks 備考 |
|---|---|---|---|---|---|---|---|---|
| C32 ,33 | | | CE04KW1C470M | ELECTRO | 47UF | 16WV | | |
| C34 | | | CE04HW1H010M | NP-ELEC | 1.0UF | 50WV | | |
| C35 | | | CC73FSL1H121J | CHIP C | 120PF | J | | |
| C36 | | | CE04HW1H2R2M | NP-ELEC | 2.2UF | 50WV | | |
| C37 | | | CE04HW1H010M | NP-ELEC | 1.0UF | 50WV | | |
| C38 | | | CE04KW1H010M | ELECTRO | 1.0UF | 50WV | | |
| C39 -41 | | | CE04HW1E100M | NP-ELEC | 10UF | 25WV | | |
| C42 ,43 | | | CK73FB1H103K | CHIP C | 0.010UF | K | | |
| C44 | | | CE04HW1E100M | NP-ELEC | 10UF | 25WV | | |
| C45 ,46 | | | CK73FB1H103K | CHIP C | 0.010UF | K | | |
| C47 | | | CE04KW0J221M | ELECTRO | 220UF | 6.3WV | | |
| C48 ,49 | | | CK73FB1H103K | CHIP C | 0.010UF | K | | |
| C50 | | | CK73FB1H152K | CHIP C | 1500PF | K | | |
| C51 | | | CK73FB1H473K | CHIP C | 0.047UF | K | | |
| C52 | | | CE04HW1A220M | NP-ELEC | 22UF | 10WV | | |
| C53 | | | CK73FB1H332K | CHIP C | 3300PF | K | | |
| C54 | | | CK73FB1H473K | CHIP C | 0.047UF | K | | |
| C55 | | | CE04KW0J221M | ELECTRO | 220UF | 6.3WV | | |
| C56 | | | CE04KW0J471M | ELECTRO | 470UF | 6.3WV | | |
| C57 ,58 | | | CC73FCH1H470J | CHIP C | 47PF | J | | |
| C59 ,60 | | | CC73FSL1H221J | CHIP C | 220PF | J | | |
| C61 -64 | | | CK73FB1H471K | CHIP C | 470PF | K | | |
| C65 | | | CK73FB1E104K | CHIP C | 0.10UF | K | | |
| C66 ,67 | | | CK73FB1H103K | CHIP C | 0.010UF | K | | |
| C68 ,69 | | | CK73FB1H681K | CHIP C | 680PF | K | | |
| C70 | | | CK73FB1H103K | CHIP C | 0.010UF | K | | |
| C71 ,72 | | | CE04HW1E100M | NP-ELEC | 10UF | 25WV | | |
| C73 ,74 | | | CK73FB1H102K | CHIP C | 1000PF | K | | |
| C75 ,76 | | | CE04KW1A470M | ELECTRO | 47UF | 10WV | | |
| C77 | | | CK73FB1H103K | CHIP C | 0.010UF | K | | |
| C78 | | | CE04KW1V470M | ELECTRO | 47UF | 35WV | | |
| C79 | | | CE04KW1V221M | ELECTRO | 220UF | 35WV | | |
| C80 ,81 | | * | CE04HW1V221M | NP-ELEC | 220UF | 35WV | | |
| C82 -85 | | | CE04KW1E221M | ELECTRO | 220UF | 25WV | | |
| C86 | | | CE04KW1C472M | ELECTRO | 4700UF | 16WV | | |
| C87 | | | CE04KW1C222M | ELECTRO | 2200UF | 16WV | | |
| C88 | | | CK73FB1H103K | CHIP C | 0.010UF | K | | |
| C89 | | | CE04KW1C222M | ELECTRO | 2200UF | 16WV | | |
| C90 ,91 | | | CK73FB1H103K | CHIP C | 0.010UF | K | | |
| C92 ,93 | | | CC73FSL1H101J | CHIP C | 100PF | J | | |
| C94 ,95 | | | CC73FSL1H221J | CHIP C | 220PF | J | | |
| C96 ,97 | | | CE04KW1A101M | ELECTRO | 100UF | 10WV | | |
| C98 -101 | | | CE04KW1C470M | ELECTRO | 47UF | 16WV | | |
| C102 | | | CC73FSL1H680J | CHIP C | 68PF | J | | |
| C103,104 | | | CK73FB1H473K | CHIP C | 0.047UF | K | | |
| C105 | | | CE04KW1V4R7M | ELECTRO | 4.7UF | 35WV | | |
| C106 | | | C90-3254-05 | ELECTRO | 2.2UF | 50WV | | |
| C107 | | | C90-3214-05 | ELECTRO | 100UF | 6.3WV | | |
| C108 | | | CK73FB1H473K | CHIP C | 0.047UF | K | | |
| C109 | | | CK73FB1H223K | CHIP C | 0.022UF | K | | |
| - | | | J11-0098-05 | WIRE CLAMPER | | | | |
| L1 | | | L33-0369-05 | CHOKE COIL | | | | |
| X1 | | | L77-1164-05 | CRYSTAL RESONATOR | | | | |

**L:**Scandinavia **K:**USA **P:**Canada
**Y:**PX(Far East, Hawaii) **T:**England **E:**Europe
**Y:**AAFES(Europe) **X:**Australia **M:**Other Areas

⚠ indicates safety critical components.

# DP-MA5/MA9

## PARTS LIST

× New Parts
Parts without Parts No. are not supplied.
Les articles non mentionnes dans le Parts No. ne sont pas fournis.
Teile ohne Parts No. werden nicht geliefert.

| Ref. No. 参照番号 | Address 位置 | New Parts 新 | Parts No. 部品番号 | Description 部品名／規格 | Destination 仕向 | Remarks 備考 |
|---|---|---|---|---|---|---|
| R82 | | | RS14KB3A4R7J | FL-PROOF RS 4.7 J 1W | | |
| R111 | | | RS14KB3D101J | FL-PROOF RS 100 J 2W | | |
| R122,123 | | | RS14KB3D3R9J | FL-PROOF RS 3.9 J 2W | | |
| R130 | | | RS14KB3A5R6J | FL-PROOF RS 5.6 J 1W | | |
| VR1 ,2 | | | R12-3686-05 | TRIMMING POT.(22K) | | |
| VR3 ,4 | | | R12-3685-05 | TRIMMING POT.(10K) | | |
| W1 -3 | | | R92-0679-05 | CHIP R 0 OHM | | |
| W4 | | | R92-0670-05 | CHIP R 0 OHM | | |
| W5 -13 | | | R92-0679-05 | CHIP R 0 OHM | | |
| W14 | | | R92-0670-05 | CHIP R 0 OHM | | |
| D1 ,2 | | | MA110 | DIODE | | |
| D1 ,2 | | | 1SS355 | DIODE | | |
| D3 ,4 | | * | HN2D01F | DIODE | | |
| D9 -14 | | | MA110 | DIODE | | |
| D9 -14 | | | 1SS355 | DIODE | | |
| D15 | | * | DTZ8.2(B) | ZENER DIODE | | |
| D16 | | * | DTZ10(B) | ZENER DIODE | | |
| D17 -22 | | * | S5688B(TPB5) | DIODE | | |
| D17 -22 | | * | 1SR139-100(T64) | DIODE | | |
| D23 ,24 | | * | DTZ10(B) | ZENER DIODE | | |
| D25 | | | DA204U | DIODE | | |
| D26 | | * | S5688B(TPB5) | DIODE | | |
| D26 | | * | 1SR139-100(T64) | DIODE | | |
| D28 | | | MA110 | DIODE | | |
| D28 | | | 1SS355 | DIODE | | |
| D29 -31 | | | DA204U | DIODE | | |
| IC1 | | * | CXA1571M | IC(CD RF AMP) | | |
| IC2 | | | CXA1372Q | IC(CD RF SERVO) | | |
| IC3 | | | CXD2500AQ | IC(SIGNAL PROCESSOR) | | |
| IC4 | | | TC9237BF | IC(D/A CONVERTER) | | |
| IC5 | | * | TC74HC165AF | IC(8BIT SHIFT REGISTER) | | |
| IC6 | | * | UPD75217GF-616 | IC | | |
| IC7 | | | NJM4565M | IC(OP AMP) | | |
| IC8 ,9 | | | LA6510 | IC(DUAL POWER OP AMP) | | |
| IC8 ,9 | | | TA8410AK | IC(POWER OP AMP) | | |
| IC10 | | * | PST529DMT | IC(SYSTEM RESET) | | |
| IC10 | | | PST572DMT | IC(SYSTEM RESET) | | |
| IC11 | | | LA6510 | IC(DUAL POWER OP AMP) | | |
| IC11 | | | TA8410AK | IC(POWER OP AMP) | | |
| IC12,13 | | | NJM4565M | IC(OP AMP) | | |
| IC14 | | | LM2940CT-5.0 | IC(LOW VOLTAGE REGULATOR) | | |
| IC15 | | | TA79005S | IC(VOLTAGE REGULATOR/ -5V) | | |
| IC15 | | | UPC7905HF | IC(VOLTAGE REGULATOR/ -5V) | | |
| Q1 | | | DTC124EU | DIGITAL TRANSISTOR | | |
| Q2 | | | 2SC3246 | TRANSISTOR | | |
| Q3 ,4 | | | DTC124EU | DIGITAL TRANSISTOR | | |
| Q5 ,6 | | | 2SC4081(R,S) | TRANSISTOR | | |
| Q7 | | | DTA124EU | DIGITAL TRANSISTOR | | |
| Q8 | | | 2SB1308(Q,R) | TRANSISTOR | | |
| Q9 | | | DTA124EU | DIGITAL TRANSISTOR | | |
| Q10 | | | 2SD1963(R,S) | TRANSISTOR | | |
| Q11 | | | DTA124EU | DIGITAL TRANSISTOR | | |
| **MECHANISM (X92-1740-10)** | | | | | | |
| 1 | 3C | * | A10-3025-01 | CHASSIS ASSY | | |

**L:**Scandinavia **K:**USA **P:**Canada
**Y:**PX(Far East, Hawaii) **T:**England **E:**Europe
**Y:**AAFES(Europe) **X:**Australia **M:**Other Areas

⚠ indicates safety critical components.

# PARTS LIST

* New Parts
Parts without Parts No. are not supplied.
Les articles non mentionnes dans le Parts No. ne sont pas fournis.
Teile ohne Parts No. werden nicht geliefert.

| Ref. No. 参照番号 | Address 位置 | New Parts 新 | Parts No. 部品番号 | Description 部品名／規格 | Destination 仕向 | Remarks 備考 |
|---|---|---|---|---|---|---|
| 2 | 3D | * | A11-0742-02 | SUB CHASSIS | | |
| 3 | 1C | * | A11-0745-01 | SUB CHASSIS | | |
| 4 | 1B | * | A11-0746-04 | SUB CHASSIS CALKING ASSY | | |
| 5 | 1D | * | A11-0750-02 | SUB CHASSIS | | |
| 6 | 2D | * | A11-0752-02 | SUB CHASSIS | | |
| 7 | 1A | * | A11-0753-03 | SUB CHASSIS | | |
| 8 | 3B | * | A11-0763-04 | SUB CHASSIS CALKING ASSY | | |
| 9 | 1A | * | A11-0765-04 | SUB CHASSIS CALKING ASSY | | |
| 14 | 3A | | D10-3105-03 | SLIDER | | |
| 15 | 2B | * | D10-3257-03 | SLIDER | | |
| 16 | 1A | * | D10-3258-03 | ARM | | |
| 17 | 2B | * | D10-3260-03 | ARM | | |
| 18 | 1B | * | D10-3261-03 | SLIDER | | |
| 19 | 1B | * | D10-3262-04 | SLIDER | | |
| 20 | 1C | * | D10-3263-03 | SLIDER | | |
| 21 | 1C | * | D10-3264-04 | SLIDER | | |
| 22 | 1B | * | D10-3265-04 | ARM | | |
| 23 | 1A | * | D10-3266-03 | ARM | | |
| 24 | 2D | * | D10-3267-03 | ARM | | |
| 25 | 2C | * | D10-3268-03 | SLIDER | | |
| 26 | 1C,1D | * | D10-3269-04 | ARM ASSY | | |
| 27 | 1D.2D | * | D10-3271-04 | ARM ASSY | | |
| 32 | 1D | * | D10-3273-03 | ARM | | |
| 33 | 3C | * | D10-3274-04 | ARM | | |
| 34 | 2A | * | D10-3275-04 | SLIDER | | |
| 35 | 2A | * | D10-3276-03 | ARM | | |
| 36 | 1A | * | D10-3278-04 | ARM ASSY | | |
| 37 | 3A | * | D10-3281-03 | SLIDER | | |
| 38 | 1C | * | D10-3294-14 | ROD | | |
| 43 | 3B | * | D13-0983-04 | GEAR | | |
| 44 | 2B | * | D13-0984-04 | GEAR | | |
| 45 | 2B | * | D13-0985-04 | GEAR | | |
| 46 | 2B | * | D13-0986-04 | GEAR | | |
| 47 | 2B,2C | * | D13-0987-04 | GEAR | | |
| 48 | 2C | * | D13-0989-04 | GEAR | | |
| 49 | 2C | * | D13-0990-04 | GEAR | | |
| 50 | 2B | * | D13-0991-04 | GEAR | | |
| 51 | 1B | * | D13-0992-04 | GEAR | | |
| 52 | 1B | * | D13-0993-04 | GEAR | | |
| 53 | 1B | * | D13-0994-04 | GEAR | | |
| 54 | 2B | * | D13-0995-04 | GEAR | | |
| 55 | 3B | * | D13-0996-04 | GEAR | | |
| 56 | 3B | * | D13-1502-04 | WORM | | |
| 57 | 3A | | D21-1633-05 | SHAFT | | |
| 60 | 3B | * | E35-0388-05 | WIRING HARNESS | | |
| 61 | 3A | * | E35-0390-05 | WIRING HARNESS | | |
| 62 | 2B,2C | * | E35-0391-05 | WIRING HARNESS | | |
| 63 | 1B | * | E35-0392-05 | WIRING HARNESS | | |
| 64 | 2C | * | E35-0417-05 | WIRING HARNESS | | |
| 65 | 2C | * | E35-0418-05 | WIRING HARNESS | | |
| 66 | 1A | * | E35-0435-08 | WIRING HARNESS | | |
| 70 | 3A | | G01-3333-04 | EXTENSION SPRING | | |
| 71 | 1A | * | G01-3470-08 | TORSION COIL SPRING | | |

**L:**Scandinavia **K:**USA **P:**Canada
**Y:**PX(Far East, Hawaii) **T:**England **E:**Europe
**Y:**AAFES(Europe) **X:**Australia **M:**Other Areas

⚠ indicates safety critical components.

# DP-MA5/MA9

## PARTS LIST

* New Parts
Parts without Parts No. are not supplied.
Les articles non mentionnes dans le Parts No. ne sont pas fournis.
Teile ohne Parts No. werden nicht geliefert.

| Ref. No. 参照番号 | Address 位置 | New Parts 新 | Parts No. 部品番号 | Description 部品名／規格 | Destination 仕向 | Remarks 備考 |
|---|---|---|---|---|---|---|
| 72 | 1A | * | G01-3471-08 | EXTENSION SPRING | | |
| 73 | 2B | * | G01-3472-04 | EXTENSION SPRING | | |
| 74 | 2C | * | G01-3473-04 | COMPRESSION SPRING | | |
| 75 | 1C | * | G01-3474-04 | EXTENSION SPRING | | |
| 76 | 2C | * | G01-3475-04 | EXTENSION SPRING | | |
| 77 | 2A | * | G01-3476-04 | EXTENSION SPRING | | |
| 78 | 1A | * | G01-3477-04 | EXTENSION SPRING | | |
| 79 | 1B | * | G01-3480-04 | EXTENSION SPRING | | |
| 80 | 1A | * | G01-3481-08 | EXTENSION SPRING | | |
| 81 | 2C | * | G01-3485-04 | COMPRESSION SPRING | | |
| 82 | 2C | * | G01-3518-04 | COMPRESSION SPRING | | |
| 83 | 2B | * | G02-1002-04 | FLAT SPRING | | |
| 84 | 1B,3C | | G10-0146-04 | NON-WOVEN FABRIC | | |
| 85 | 1A,1D | * | G11-0129-04 | SOFT TAPE (20X7X3) | | |
| 86 | 1A,1B | * | G11-2134-08 | CUSHION | | |
| 91 | 2C | | J02-1058-15 | INSULATOR | | |
| 92 | 2D | * | J11-0181-03 | CLAMPER | | |
| 93 | 3A | * | J19-3485-02 | HOLDER ASSY | | |
| 94 | 3A | * | J19-3486-01 | HOLDER | | |
| 95 | 2B | * | J19-3487-02 | HOLDER | | |
| 96 | 2A | * | J19-3489-02 | HOLDER | | |
| 97 | 1B | * | J21-5922-04 | MOUNTING HARDWARE | | |
| 98 | 1C | * | J90-0685-03 | GUIDE | | |
| 99 | 2C | * | J90-0686-04 | RAIL ASSY | | |
| 100 | 3D | * | J90-0688-03 | RAIL | | |
| 101 | 3A | * | J99-0517-02 | TRAY | | |
| ⚠ 106 | 1A | | S33-1002-05 | LEVER SWITCH (POWER TYPE) | | |
| 107 | 3B | | S33-2061-05 | LEVER SWITCH | | |
| SW1 | 2C | | S33-1022-05 | LEVER SWITCH | | |
| 122 | 2B | | T42-0597-05 | DC MOTOR | | |
| 123 | 2D | | T50-1055-04 | YOKE | | |
| 124 | 2D | | T99-0503-15 | MAGNET | | |
| DM | 2C | * | A11-0780-04 | SUB CHASSIS ASSY | | |
| FM | 1B | * | T42-0612-04 | MOTOR ASSY | | |
| LM | 3A | * | T42-0620-05 | DC MOTOR | | |
| PU | 1C | * | T25-0023-05 | OPTICAL PICKUP HEAD | | |
| SOL1 | 1A | * | T94-0227-08 | MAGNETIC PLUNGER | | |
| VM | 1B | | T42-0567-05 | DC MOTOR | | |

**L:**Scandinavia **K:**USA **P:**Canada
**Y:**PX(Far East, Hawaii) **T:**England **E:**Europe
**Y:**AAFES(Europe) **X:**Australia **M:**Other Areas

⚠ indicates safety critical components.

# PARTS LIST

## CAPACITORS

CC 45 TH 1H 220 J
1 2 3 4 5 6

1 = Type ... ceramic, electrolytic, etc.
2 = Shape ... round, square, ect.
3 = Temp. coefficient
4 = Voltage rating
5 = Value
6 = Tolerance

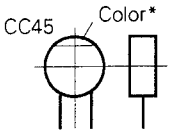


**• Capacitor value**

010 = 1pF
100 = 10pF
101 = 100pF
102 = 1000pF = 0.001μF
103 = 0.01μF

2 2 0 = 22pF
Multiplier
2nd number
1st number

**• Temperature coefficient**

| 1st Word | C | L | P | R | S | T | U |
|---|---|---|---|---|---|---|---|
| Color* | Black | Red | Orange | Yellow | Green | Blue | Violet |
| ppm/°C | 0 | −80 | −150 | −220 | −330 | −470 | −750 |

| 2nd Word | G | H | J | K | L |
|---|---|---|---|---|---|
| ppm/°C | ±30 | ±60 | ±120 | ±250 | ±500 |

Example : CC45TH = −470 ± 60ppm/°C

**• Tolerance (More than 10pF)**

| Code | C | D | G | J | K | M | X | Z | P | No code |
|---|---|---|---|---|---|---|---|---|---|---|
| (%) | ±0.25 | ±0.5 | ±2 | ±5 | ±10 | ±20 | +40<br>−20 | +80<br>−20 | +100<br>−0 | More than 10μF − 10 ~ +50<br>Less than 4.7μF −10 ~ +75 |

**(Less than 10pF)**

| Code | B | C | D | F | G |
|---|---|---|---|---|---|
| (pF) | ±0.1 | ±0.25 | ±0.5 | ±1 | ±2 |

**• Voltage rating**

| 1st word \ 2nd word | A | B | C | D | E | F | G | H | J | K | V |
|---|---|---|---|---|---|---|---|---|---|---|---|
| 0 | 1.0 | 1.25 | 1.6 | 2.0 | 2.5 | 3.15 | 4.0 | 5.0 | 6.3 | 8.0 | – |
| 1 | 10 | 12.5 | 16 | 20 | 25 | 31.5 | 40 | 50 | 63 | 80 | 35 |
| 2 | 100 | 125 | 160 | 200 | 250 | 315 | 400 | 500 | 630 | 800 | – |
| 3 | 1000 | 1250 | 1600 | 2000 | 2500 | 3150 | 4000 | 5000 | 6300 | 8000 | – |

**• Chip capacitors**

(EX) C C 7 3 F S L 1 H 0 0 0 J
1 2 3 4 5 6 7
(Chip) (CH, RH, UJ, SL)

(EX) C K 7 3 F F 1 H 0 0 0 Z
1 2 3 4 5 6 7
(Chip) (B, F)

Refer to the table above.
1 = Type
2 = Shape
3 = Dimension
4 = Temp. coefficient
5 = Voltage rating
6 = Value
7 = Tolerance

**Dimension (Chip capacitors)**

| Dimension code | L | W | T |
|---|---|---|---|
| Empty | 5.6 ± 0.5 | 5.0 ± 0.5 | Less than 2.0 |
| A | 4.5 ± 0.5 | 3.2 ± 0.4 | Less than 2.0 |
| B | 4.5 ± 0.5 | 2.0 ± 0.3 | Less than 2.0 |
| C | 4.5 ± 0.5 | 1.25 ± 0.2 | Less than 1.25 |
| D | 3.2 ± 0.4 | 2.5 ± 0.3 | Less than 1.5 |
| E | 3.2 ± 0.2 | 1.6 ± 0.2 | Less than 1.25 |
| F | 2.0 ± 0.3 | 1.25 ± 0.2 | Less than 1.25 |
| G | 1.6 ± 0.2 | 0.8 ± 0.2 | Less than 1.0 |

## RESISTORS

**• Chip resistor (Carbon)**

(EX) R K 7 3 E B 2 B 0 0 0 J
1 2 3 4 5 6 7
(Chip) (B,F)

**Dimension (Chip resistor)**

| Dimension code | L | W | T |
|---|---|---|---|
| E | 3.2 ± 0.2 | 1.6 ± 0.2 | 1.0 |
| F | 2.0 ± 0.3 | 1.25 ± 0.2 | 1.0 |
| G | 1.6±0.2 | 0.8±0.2 | 0.5±0.1 |

**• Carbon resistor (Normal type)**

(EX) R D 1 4 B B 2 C 0 0 0 J
1 2 3 4 5 6 7

1 = Type
2 = Shape
3 = Dimension
4 = Temp. coefficient
5 = Rating wattage
6 = Value
7 = Tolerance

**Rating wattage**

| Code | Wattage | Code | Wattage | Code | Wattage |
|---|---|---|---|---|---|
| 1J | 1/16W | 2C | 1/6W | 3A | 1W |
| 2A | 1/10W | 2E | 1/4W | 3D | 2W |
| 2B | 1/8W | 2H | 1/2W | | |

**Dimension**

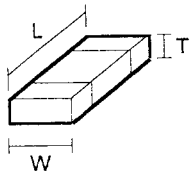

# DP-MA5/MA9

## SPECIFICATIONS

| | |
|---|---|
| **Laser** | **Semiconductor laser** |
| **Playing rotation** | **200rpm~500rpm (CLV)** |
| **Frequency response** | **20Hz~20kHz, ±1.0dB** |
| **Signal to noise ratio** | **More than 93dB** |
| **Total harmonic distortion** | **Less than 0.01% (at 1kHz)** |
| **Channel separation** | **More than 85dB (at 1kHz)** |
| **Wow & Flutter** | **Unmeasurable Limit** |

**[GENERAL]**

| | |
|---|---|
| **Dimensions (W x H x D)** | **270 (10-5/8") x 85 (3-3/8") x 310 (12-3/16")mm** |
| **Weight (Net)** | **3.2kg (7.0lb)** |

**KENWOOD** follows a policy of continuous advancements in development. For this reason specifications may be changed without notice.

**Note :**
Component and circuitry are subject to modification to insure best operation under differing local conditions. This manual is based on, the U.S.A. (K) standard, and provides information on regional circuit modification through use of alternate schematic diagrams, and information on regional component variations through use of parts list.


KENWOOD CORPORATION
Alive Mitake, 2-5, 1-chome Shibuya, Shibuya-ku, Tokyo 150, Japan
KENWOOD U.S.A. CORPORATION
CONSUMER ELECTRONICS GROUP
P.O. BOX 22745, 2201 East Dominguez St., Long Beach, CA 90810, U.S.A.
KENWOOD ELECTRONICS CANADA INC.
6070 Kestrel Road, Mississauga, Ontario, Canada L5T 1S8
KENWOOD ELECTRONICS LATIN AMERICA S.A.
P.O. BOX 55-2791, Piso 6 Plaza Chase, Cl. 47 y Aquilino de la Guardia, Panama, Republic de Panama
TRIO-KENWOOD U.K. LIMITED
KENWOOD House, Dwight Road, Watford, Herts., WD1 8EB United Kingdom
KENWOOD ELECTRONICS BENELUX N.V.
Mechelsesteenweg 418 B-1930 Zaventem, Belgium
KENWOOD ELECTRONICS DEUTSCHLAND GMBH
Rembrücker-Str. 15, 6056 Heusenstamm, Germany
TRIO-KENWOOD FRANCE S.A.
13 Boulevard Ney, 75018 Paris, France
KENWOOD LINEAR S.p.A.
20125, Milano-via Arbe, 50, Italy
KENWOOD ESPAÑA S.A.
Bolivia, 239-08020 Barcelona, Spain
KENWOOD ELECTRONICS AUSTRALIA PTY. LTD. (A.C.N. 001 499 074)
P.O. BOX 504, 8 Figtreel Drive, Australia Centre, Homebush, N.S.W. 2140, Australia
KENWOOD & LEE ELECTRONICS, LTD.
Unit 3712-3724, Level 37 Tower 1, Metroplaza, 223 Hing Fong Road, Kwai Fong N.T. Hong Kong
KENWOOD ELECTRONICS SINGAPORE PTE LTD.
No. 1 Genting Lane #07-00, Singapore, 1334